Cesar

96231434 <CESAR 1 CIRC 1x35W 12V QR-CBC51/GU5,3

IP65 | IK08

Cesar's simple, cylindrical style, available in four sizes, offers a choice of adjustable light sources and superior highlighting

A robust, wall-mounted downlight for 1 x 35W Light Source: 1 x QR-CB 51 / 35W lamp. The grey aluminium body, with integral gear and sealed to IP65, offers an aesthetic design both by day and by night.

Dimensions: 145 x 235 x 90 mm
Luminaire input power: 35 W
Weight: 1.78 kg

TLG_CESA_F_1.jpg

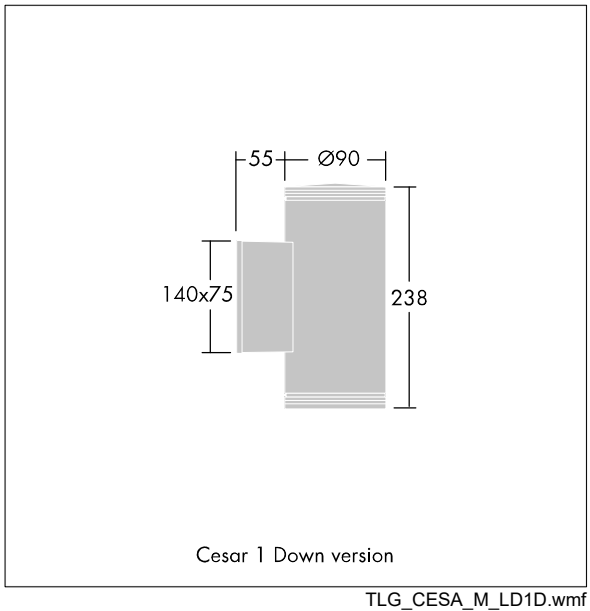

TLG_CESA_M_LD1D.wmf

All values marked with an * are rated values. Unless stated otherwise, the values apply to an ambient temperature of 25°C.
Thorn Lighting is constantly developing and improving its products. The right is reserved to change specifications without prior notification or public announcement.
© Thorn Lighting