Voyager Sigma

96233816 VOYAGER SIGMA LED E3TX SIL

IP40	IK03	⏚	CE	EAC	650°C	T_a 5 35	

Versatile exit sign with low-maintenance LED option

A self-contained, maintained emergency exit sign for 1 x 1W Light Source: LED strip giving 3 hour SelfTest or Addressable Test if connected to Explorer Project/Vision, emergency operation. IP40, Class I electrical. Body in polycarbonate, finished metallic silver. Diffuser in polycarbonate. Can be wall mounted with 20mm conduit or rear back box entry. Legend panels required to be ordered separately in either ISO or EU formats. Complete with LED strip

Dimensions: 327 x 65 x 197 mm
Luminaire input power: 4 W
Weight: 1.4 kg

TLG_VSIG_F_WALL.jpg

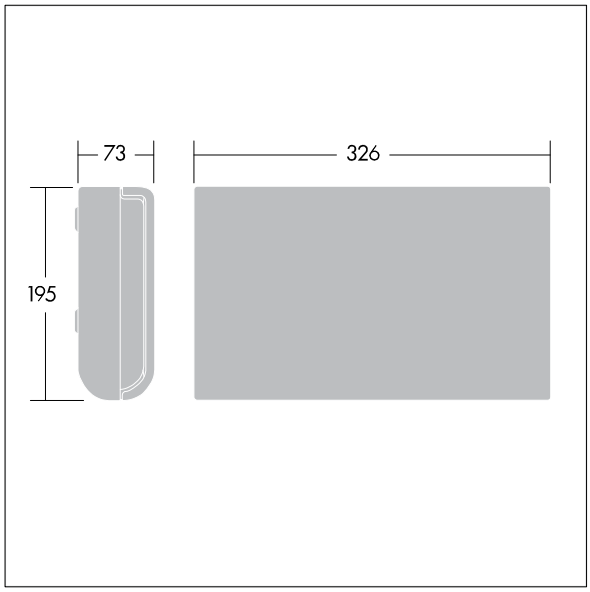

TLG_VYSG_M_LD1.wmf

All values marked with an * are rated values. Thorn uses tried and tested components from leading suppliers, however there may be isolated instances of technology-related failures of individual LEDs during the rated product lifetime. International standards set the tolerance in initial flux and connected load at ±10%. Unless stated otherwise, the values apply to an ambient temperature of 25°C.

Thorn Lighting is constantly developing and improving its products. The right is reserved to change specifications without prior notification or public announcement.
© Thorn Lighting