Cimi

96205025 <CIMI 1X24W HF SW LI 830 WHI

	IP44	IK06		CE		EAC	850°C	

Slim and aesthetic bathroom luminaire developed to comply with today's contemporary demands on design and technology

Slim and aesthetic IP44 bathroom luminaire for 1 x 24W Light Source: 1 x T16 / 24W lamp with electronic - fixed output ballast, body in white finished extruded aluminium, endcaps in white finish die-cast aluminium and diffuser in opal polycarbonate. Two Ø19mm cable entries, offset in the back of housing, Ø12mm knock out holes in endcaps as well as top edge of luminaire for surface installation. Piano key terminal block 4 x 2 x 2.5mm². Complete with 830 lamp (s).. With integral switch.

Dimensions: 616 x 60 x 90 mm
Luminaire input power: 26.9 W
Weight: 1.3 kg

TLG_CIMI_F_P1.jpg

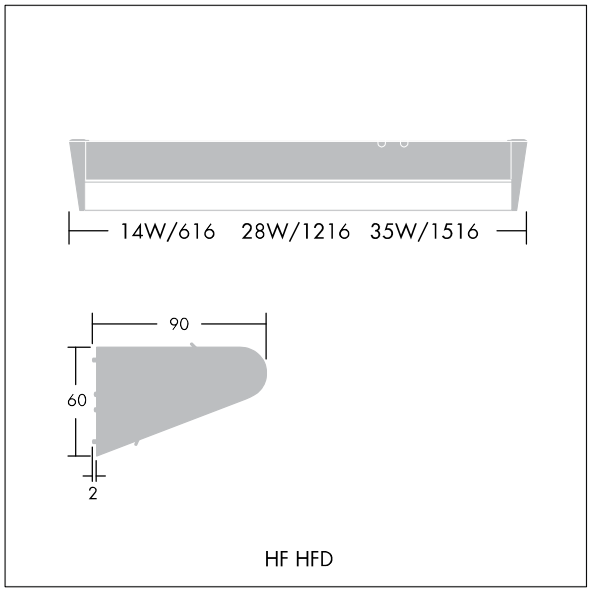

TLG_CIMI_M_LD3.wmf

All values marked with an * are rated values. Unless stated otherwise, the values apply to an ambient temperature of 25°C.

Thorn Lighting is constantly developing and improving its products. The right is reserved to change specifications without prior notification or public announcement.
© Thorn Lighting

Cimi

96205025 <CIMI 1X24W HF SW LI 830 WHI

Thorn Lighting is constantly developing and improving its products. The right is reserved to change specifications without prior notification or public announcement.
© Thorn Lighting