THORN

96260076 <AVENUE F2 70W HIDE 2,5Kv E27 CL2
+ HSE 70W

IP66 | IK08

Decorative post-top lantern for 1 x 70W Light Source: 1 x HST/HIT-CE / 70W lamp with electronic control gear and symmetric distribution. Class II electrical, IP66, IK08. Base and arms: die-cast aluminium (LM6), Canopy: spun aluminium, all powder coated dark sandy grey 900 (close to RAL7043). Diffuser: clear polycarbonate with frosted band. Screw fixings: stainless steel. Supplied complete in one box. Lamp to be ordered separately.

Post top mounted on a spigot of Ø60mm, length 100mm.

Dimensions: Ø700/700 x 500 mm
Luminaire input power: 84 W
Weight: 9.2 kg
Scx: 0.17 m²
Luminaire efficacy: 71 lm/W

TLG_AVEF_F_FRS.jpg

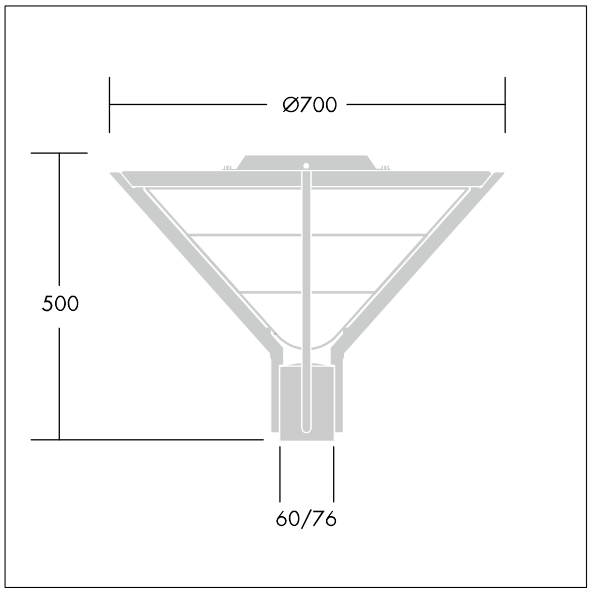

TLG_AVEF_M_LD1.wmf

All values marked with an * are rated values. Unless stated otherwise, the values apply to an ambient temperature of 25°C.

Thorn Lighting is constantly developing and improving its products. The right is reserved to change specifications without prior notification or public announcement.
© Thorn Lighting

96260076 <AVENUE F2 70W HIDE 2,5Kv E27 CL2
+ HSE 70W

Thorn Lighting is constantly developing and improving its products. The right is reserved to change specifications without prior notification or public announcement.
© Thorn Lighting