Legend

96262700 LEGEND 36L70 RC 730 CL2 MSU 34G

ISO 9223 C5	IP65	IK08						

Legend

A modern heritage Suspended through 34G. LED lantern with closed optic. Electronic,. Class II electrical, IP65, IK08. Body: die-cast aluminium powder coated grey 900 textured finish (close to RAL 7043). Enclosure: flat toughened glass. Surge protection: 10kV single pulse common mode and 8kV multipulse common mode and 6kV multipulse differential mode. If permanent DALI system is connected, 6kV multipulse common and differential mode. Complete with 3000K LED.

Dimensions: 446 x 446 x 1004 mm
Luminaire input power: 77 W
Weight: 16.5 kg
Scx: 0.14 m²

TLG_LGND_F_LEDPDBLIT.jpg

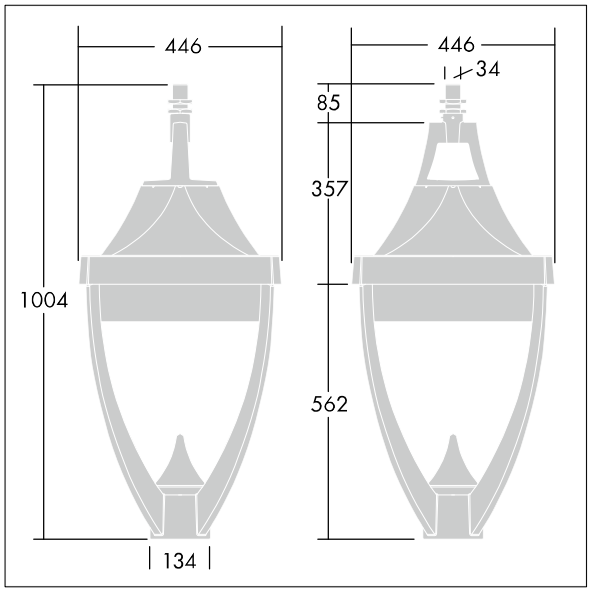

TLG_LGND_M_MSU.wmf

This product contains a light source of energy efficiency class D.

All values marked with an * are rated values. Thorn uses tried and tested components from leading suppliers, however there may be isolated instances of technology-related failures of individual LEDs during the rated product lifetime. International standards set the tolerance in initial flux and connected load at ±10%. Unless stated otherwise, the values apply to an ambient temperature of 25°C.

Thorn Lighting is constantly developing and improving its products. The right is reserved to change specifications without prior notification or public announcement.
© Thorn Lighting