# Contrast 2 LED

## 96263222 <CONT2 M 12L70 RGB A/S KIT

| | | | | | | |
|---|---|---|---|---|---|---|
| ISO 9223 C3 | IP66 | IK08 | | | | |

## Contrast 2 LED

A compact architectural LED Bracket mounted with asymmetrical light distribution. Class II electrical, IP66, IK08. Body and Frame: die-cast aluminium, sanded silver grey 150. Glass: tempered 4mm thick. Gasket: EPDM. Complete with RGB LEDs.

With remote connection box, power supply and DMX module.

Dimensions: 355 x 195 x 71 mm
Luminaire input power: 29 W
Weight: 4.17 kg

TLG_CONL_F_M50X50PDBMENA.jpg

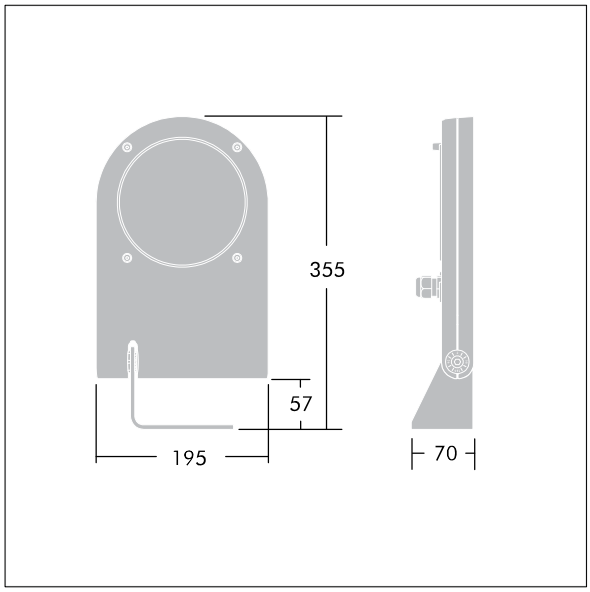


TLG_CON2_M_MENA_LDM.wmf

All values marked with an * are rated values. Thorn uses tried and tested components from leading suppliers, however there may be isolated instances of technology-related failures of individual LEDs during the rated product lifetime. International standards set the tolerance in initial flux and connected load at ±10%. Unless stated otherwise, the values apply to an ambient temperature of 25°C.

Thorn Lighting is constantly developing and improving its products. The right is reserved to change specifications without prior notification or public announcement.
© Thorn Lighting

# Contrast 2 LED

## 96263222 <CONT2 M 12L70 RGB A/S KIT

Thorn Lighting is constantly developing and improving its products. The right is reserved to change specifications without prior notification or public announcement.
© Thorn Lighting