Dyana

96264371 <DYANA2 LED 72L70 NR 740 CLO CL2 MLE

IP66 IK09

Dyana

A high quality, constant light output, LED luminaire with narrow road light distribution and Electronic, Programmable control gear. Body and spigot: die-cast aluminium, textured dark grey finish. Canopy: spun aluminium, textured anthracite finish. Enclosure: 5mm thick, toughened glass. Class II electrical, IP66. Supplied, ready to install, in a single box. Complete with 4000K LED

Mounting: Ø60mm side entry with 0° tilt.

Dimensions: 760 x 600 x 130 mm
Luminaire input power: 152 W
Weight: 14.7 kg
Scx: 0.049 m²

TLG_DYNA_F_2MLEDPDB_1_14.jpg

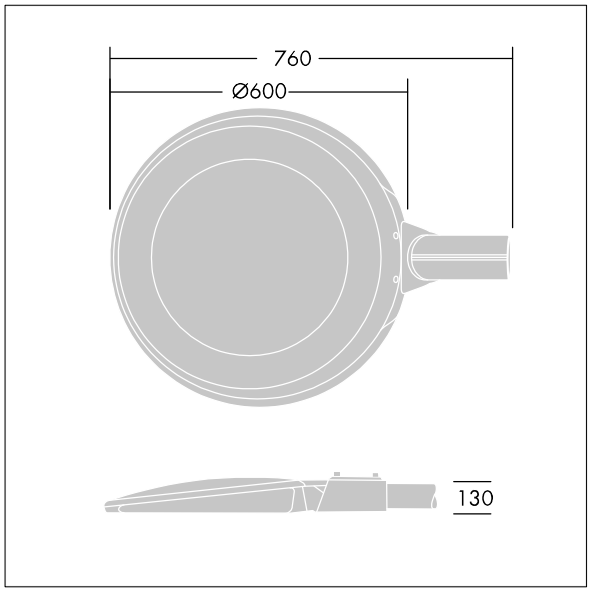

TLG_DYNA_M_LED2 MLE.wmf

This product contains a light source of energy efficiency class D.

All values marked with an * are rated values. Thorn uses tried and tested components from leading suppliers, however there may be isolated instances of technology-related failures of individual LEDs during the rated product lifetime. International standards set the tolerance in initial flux and connected load at ±10%. Unless stated otherwise, the values apply to an ambient temperature of 25°C.

Thorn Lighting is constantly developing and improving its products. The right is reserved to change specifications without prior notification or public announcement.
© Thorn Lighting

Dyana

96264371 <DYANA2 LED 72L70 NR 740 CLO CL2 MLE

Thorn Lighting is constantly developing and improving its products. The right is reserved to change specifications without prior notification or public announcement.
© Thorn Lighting