Urba

96269503 <URBA S 24L50 WSC ANT BP CL2 MLE L740

ISO 9223 C5 | IP66 | IK09

Urba

A small size LED urban street lighting lantern with 24 LEDs driven at 500mA with Wide Street & Comfort optic. Electronic, fixed output control gear. Class II electrical, IP66, IK09. Body: die-cast aluminium, textured dark grey. Cover: tempered flat clear glass. Side entry mounting to Ø60mm spigot with adjustable tilt angles of 0°, -5°, -10°. Integral power reduction function which dims down to 50% power, effective 3 hours before and 5 hours after a calculated midnight. Complete with 4000K LED.

Dimensions: 714 x 336 x 164 mm
Luminaire input power: 38 W
Weight: 10.5 kg
Scx: 0.08 m²

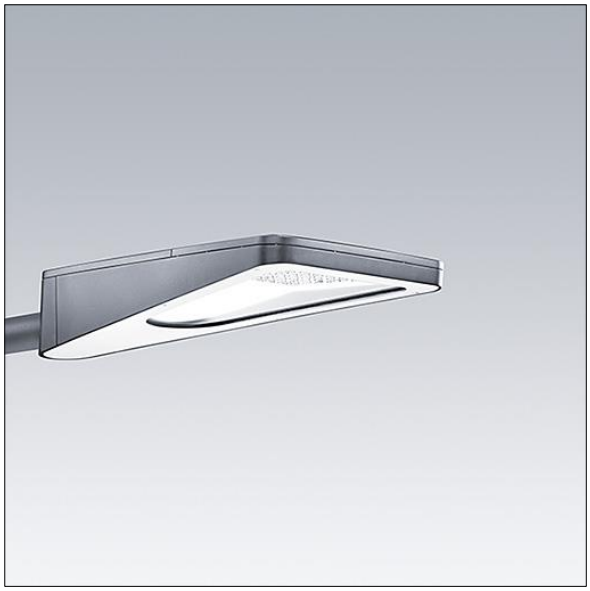

TLG_URBA_F_SMLEGYPDB.jpg

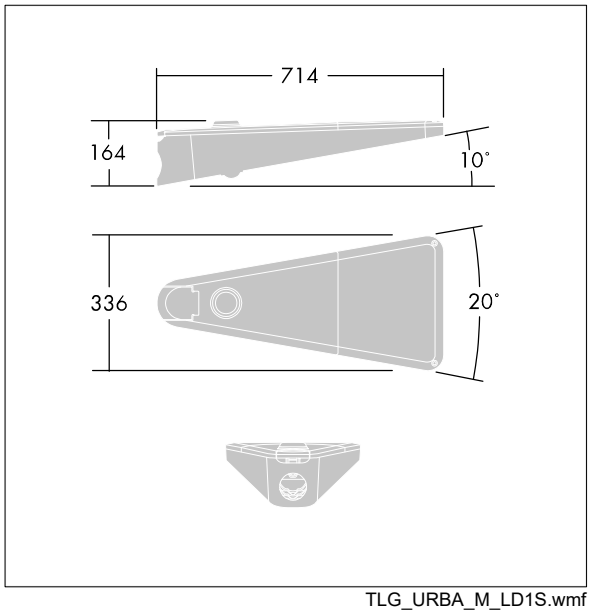

TLG_URBA_M_LD1S.wmf

This product contains a light source of energy efficiency class D.

All values marked with an * are rated values. Thorn uses tried and tested components from leading suppliers, however there may be isolated instances of technology-related failures of individual LEDs during the rated product lifetime. International standards set the tolerance in initial flux and connected load at ±10%. Unless stated otherwise, the values apply to an ambient temperature of 25°C.

Thorn Lighting is constantly developing and improving its products. The right is reserved to change specifications without prior notification or public announcement.
© Thorn Lighting