Urba

96269834 <URBA S 36L35 WR ANT BP CL1 8M MTP76 L74

ISO 9223 C5 | IP66 | IK09

Urba

A small size LED urban street lighting lantern with 36 LEDs driven at 350mA with Wide Road optic. Electronic, fixed output control gear. Class I electrical, IP66, IK09. Body: die-cast aluminium, textured dark grey. Cover: tempered flat clear glass. Pre-wired with 8m cable. Post top mounting to Ø76mm column. Integral power reduction function which dims down to 50% power, effective 3 hours before and 5 hours after a calculated midnight. Complete with 4000K LED.

Dimensions: 738 x 336 x 345 mm
Luminaire input power: 39 W
Weight: 10.5 kg
Scx: 0.1 m²

TLG_URBA_F_SMTPGYPDB.jpg

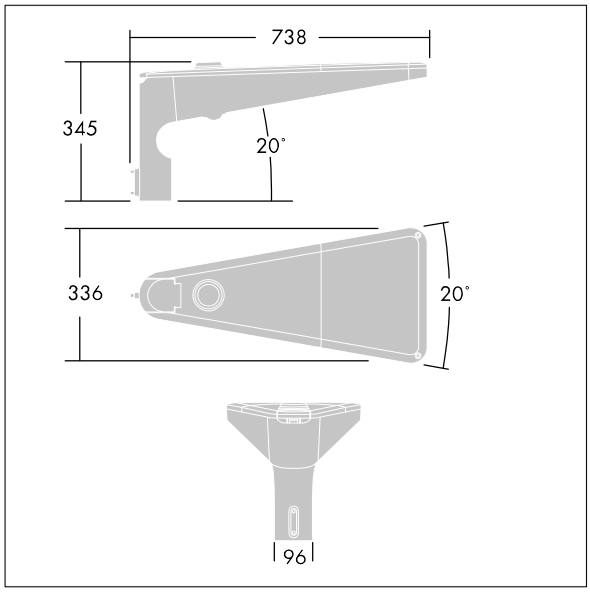

TLG_URBA_M_MTP70S.wmf

This product contains a light source of energy efficiency class D.

All values marked with an * are rated values. Thorn uses tried and tested components from leading suppliers, however there may be isolated instances of technology-related failures of individual LEDs during the rated product lifetime. International standards set the tolerance in initial flux and connected load at ±10%. Unless stated otherwise, the values apply to an ambient temperature of 25°C.

Thorn Lighting is constantly developing and improving its products. The right is reserved to change specifications without prior notification or public announcement.
© Thorn Lighting

Urba

96269834 <URBA S 36L35 WR ANT BP CL1 8M MTP76 L74

Thorn Lighting is constantly developing and improving its products. The right is reserved to change specifications without prior notification or public announcement.
© Thorn Lighting