EP 145

96269259 EP 145 LED 36L70 NR 740 RCU/MSU

ISO 9223 C3 | IP66 | IK08

EP 145

A 19th Century styled suspended lantern with 36 LEDs driven at 700mA with Narrow Road optic. Class II electrical, IP66, IK08. Body: copper, treated. Canopy: GRP/Polyester, copper finish. Enclosure: 5mm thick tempered glass. Complete with 4000K LED

Dimensions: 420 x 420 x 944 mm
Luminaire input power: 77 W
Weight: 11.8 kg
Scx: 0.145 m²

TLG_EP14_F_LEDMSUCOPPDB.jpg

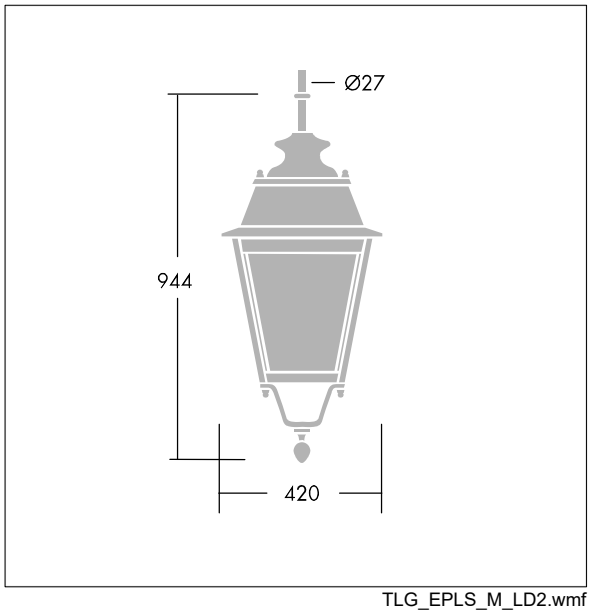

TLG_EPLS_M_LD2.wmf

This product contains a light source of energy efficiency class D.

All values marked with an * are rated values. Thorn uses tried and tested components from leading suppliers, however there may be isolated instances of technology-related failures of individual LEDs during the rated product lifetime. International standards set the tolerance in initial flux and connected load at ±10%. Unless stated otherwise, the values apply to an ambient temperature of 25°C.

Thorn Lighting is constantly developing and improving its products. The right is reserved to change specifications without prior notification or public announcement.
© Thorn Lighting