# FleXity

## 96270813 <FLEX 24L50-730 WSC BP CL1 W5 T60 ANT

| | | | | | | | | | | | |
|---|---|---|---|---|---|---|---|---|---|---|---|
| ISO 9223 C3 | | IP66 | IK09 | | CE | | EAC | | | | $T_a$ -20 +25 |

## FleXity

A modern, discreet and versatile post top LED lantern with a asymmetrical distribution. LED driver Programmable driving 24 LEDs at 500mA. Class I electrical, IP66, IK09. Canopy and base: die-cast aluminium (EN AC-46100) powder coated dark grey (close to RAL7043). Enclosure: clear polycarbonate. Equipped with power reduction circuit, effective 3 hours before and 5 hours after a calculated midnight. Complete with 3000K LED. Post top mounting to Ø60mm column, maximum spigot length 75mm. Pre-wired with 5m cable.

Surge protection: 10kV single pulse common mode and 8kV multipulse common mode and 6kV multipulse differential mode. If permanent DALI system is connected, 6kV multipulse common and differential mode.

Dimensions: 370 x 430 x 290 mm
Luminaire input power: 40 W
Luminaire luminous flux: 4360 lm
Luminaire efficacy: 109 lm/W
Weight: 4.5 kg
Scx: 0.038 m²

TLG_FLEX_F_D60PDB.jpg

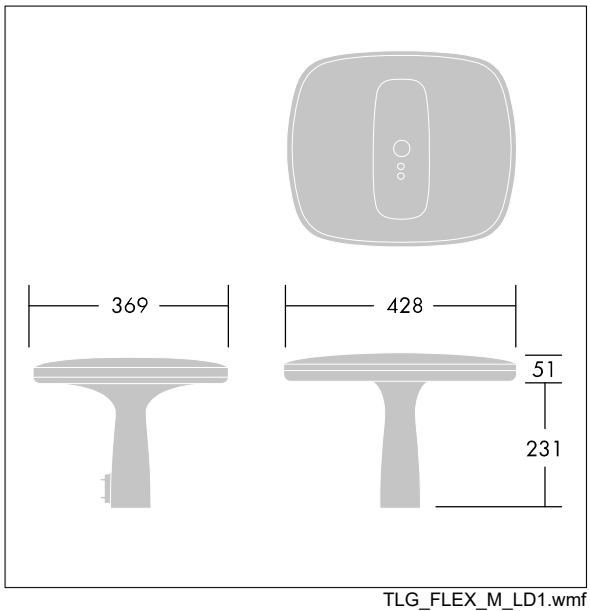


TLG_FLEX_M_LD1.wmf

This product contains a light source of energy efficiency class D.

All values marked with an * are rated values. Thorn uses tried and tested components from leading suppliers, however there may be isolated instances of technology-related failures of individual LEDs during the rated product lifetime. International standards set the tolerance in initial flux and connected load at ±10%. Unless stated otherwise, the values apply to an ambient temperature of 25°C.

Thorn Lighting is constantly developing and improving its products. The right is reserved to change specifications without prior notification or public announcement.
© Thorn Lighting