Mica

96271496 <MICA SLIM S 3L35 SOFT BLU AL FR

IP67	IK10							

Mica

A small, shallow, round ground recessed luminaire. 3 LED (s) driven at 350mA by integral driver for driveover guidance applications. Body: die-cast aluminium with powdered paint finish. Frame: painted aluminium, 3mm thick. Front glass: frosted toughened glass, mm thick, surface temperature complies with EN60598-2-13. Pre-wired with 0.5m cable. Recessing box: polypropylene. Rated IP67, class I electrical. Maximum static load 3500kg. Complete with blue LED

Mica and Mica Slim can be installed in areas with a maximum low speed of 30km/h for the flat versions and 20km/h for the dome versions.

Dimensions: Ø153 x 175 mm
Luminaire input power: 2.5 W

Weight: 2.2 kg

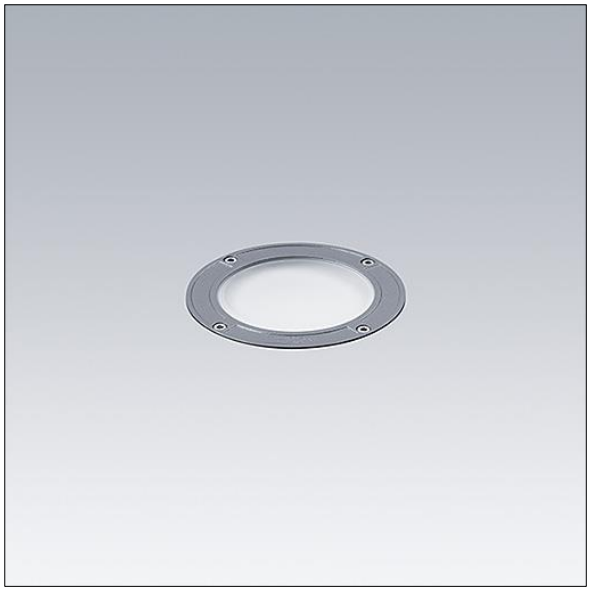

TLG_MICA_F_SSALFR.jpg

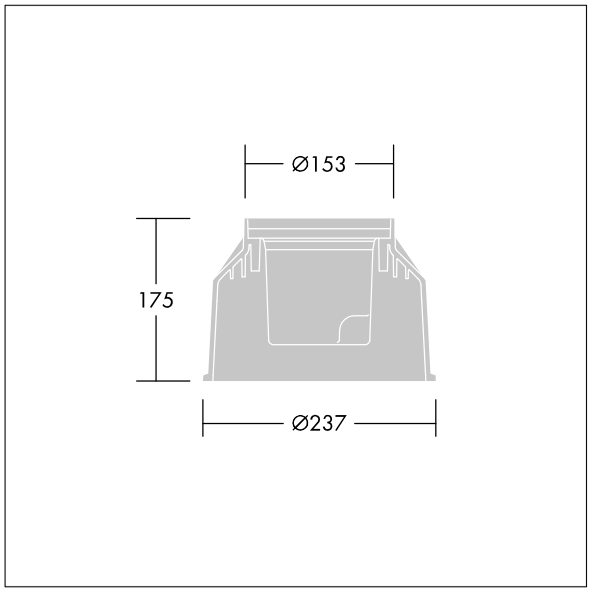

TLG_MICA_M_2015LDSLMSAL.wmf

All values marked with an * are rated values. Thorn uses tried and tested components from leading suppliers, however there may be isolated instances of technology-related failures of individual LEDs during the rated product lifetime. International standards set the tolerance in initial flux and connected load at ±10%. Unless stated otherwise, the values apply to an ambient temperature of 25°C.

Thorn Lighting is constantly developing and improving its products. The right is reserved to change specifications without prior notification or public announcement.
© Thorn Lighting