E/Fact

96271700 EFACT R2 9L50 SOFT 832 AL FR

IP67	IK09							

E/Fact

A large round ground recessed luminaire. 9 LED(s) driven at 500mA by integral driver for walkover guidance applications. Body: die-cast aluminium with powdered paint finish. Frame: painted aluminium, 2mm thick. Front glass: frosted toughened sodic glass, 12mm thick, surface temperature complies with EN60598-2-13. Recessing box: polypropylene. Rated IP67, class I electrical. Maximum static load 1000kg. Complete with 3200K LED

Dimensions: Ø260 x 200 mm
Luminaire input power: 11.5 W
Luminaire luminous flux: 133 lm
Luminaire efficacy: 12 lm/W
Weight: 5.6 kg

TLG_EFCT_F_R2ALFR.jpg

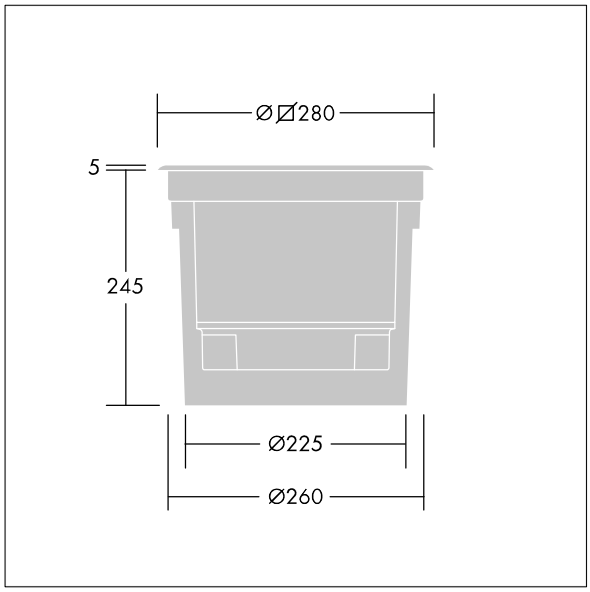

TLG_EFCT_M_2015LD2AL.wmf

This product contains a light source of energy efficiency class E.

All values marked with an * are rated values. Thorn uses tried and tested components from leading suppliers, however there may be isolated instances of technology-related failures of individual LEDs during the rated product lifetime. International standards set the tolerance in initial flux and connected load at ±10%. Unless stated otherwise, the values apply to an ambient temperature of 25°C.

Thorn Lighting is constantly developing and improving its products. The right is reserved to change specifications without prior notification or public announcement.
© Thorn Lighting

E/Fact

96271700 EFACT R2 9L50 SOFT 832 AL FR

Thorn Lighting is constantly developing and improving its products. The right is reserved to change specifications without prior notification or public announcement.
© Thorn Lighting