Plurio

96272443 PLD R 18L105-730 R/S BS 3550 T60 CL2 GY

CB Certificate	ISO 9223 C5	ida DARK SKY APPROVED	IP66	IK08		CE					T_a25

Plurio

Decorative, post-top lantern with LED package with electronic driver. Class II electrical, IP66, IK08. Base in cast aluminium, powder coated silver-grey. Canopy in round shape, made from aluminium textured silver-grey (close to RAL9006). UV stabilised polycarbonate clear diffuser with anti-glare prisms. Internal symmetric reflector. Equipped with 50% power reduction circuit, effective 3 hours before and 5 hours after a calculated midnight. It can be deactivated at installation with an easily accessible internal switch. Supplied complete in one box. Complete with 3000K LED

To be post top mounted on a spigot of Ø60mm, length 75mm.

Dimensions: Ø564 x 564 mm
Luminaire input power: 60 W
Weight: 7.8 kg
Scx: 0.073m²
Luminaire efficacy: 78 lm/W

TLG_PLRO_F_LEDSYMRND.jpg

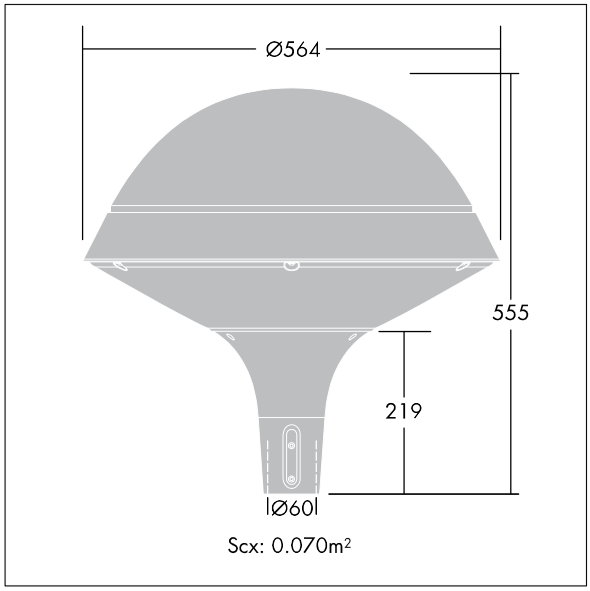

TLG_PLRO_M_SPHRd60.wmf

This product contains a light source of energy efficiency class D.

All values marked with an * are rated values. Thorn uses tried and tested components from leading suppliers, however there may be isolated instances of technology-related failures of individual LEDs during the rated product lifetime. International standards set the tolerance in initial flux and connected load at ±10%. Unless stated otherwise, the values apply to an ambient temperature of 25°C.

Thorn Lighting is constantly developing and improving its products. The right is reserved to change specifications without prior notification or public announcement.
© Thorn Lighting

Plurio

96272443 PLD R 18L105-730 R/S BS 3550 T60 CL2 GY

Thorn Lighting is constantly developing and improving its products. The right is reserved to change specifications without prior notification or public announcement.
© Thorn Lighting