Areaflood Pro

96644688 <AFP L 144L70-740 EWR HFX CL1 GY

ISO 9223 C5 | IP66 | IK08 | T_a -25 +35

Areaflood Pro

A compact, lightweight, general purpose LED area floodlight. With large body. LED converter configured for DALI control over additional wires, driving 144 LEDs at 700mA with Extra Wide Road light distribution. IP66, IK08, Class I electrical. Body: die-cast aluminium (EN AC-44300), Light grey 150 sanded textured (close to RAL9006).. Enclosure: mm thick toughened glass. Reversable mounting stirrup supplied, Complete with 4000K LED.

TLG_AFLP_F_LARGEPDB.jpg

Dimensions: 658 x 490 x 139 mm
Luminaire input power: 297 W
Luminaire luminous flux: 45357 lm
Luminaire efficacy: 153 lm/W
weight: 18.54 kg
Scx: 0.073 m²

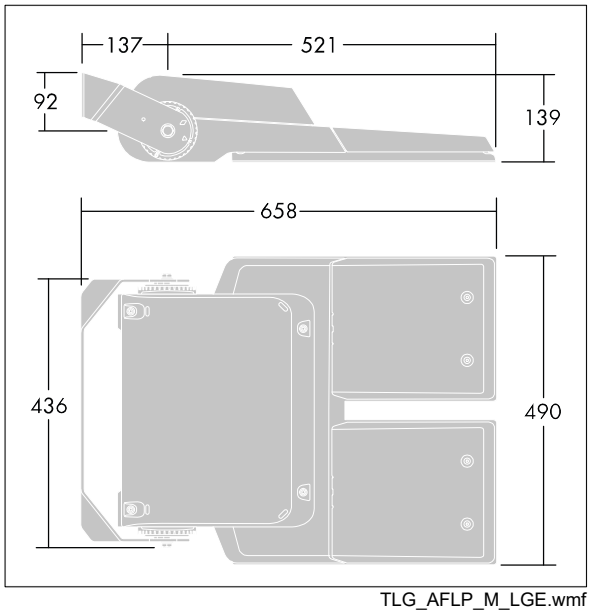

TLG_AFLP_M_LGE.wmf

This product contains light sources of energy efficiency class E.

All values marked with an * are rated values. Thorn uses tried and tested components from leading suppliers, however there may be isolated instances of technology-related failures of individual LEDs during the rated product lifetime. International standards set the tolerance in initial flux and connected load at ±10%. Unless stated otherwise, the values apply to an ambient temperature of 25°C.

Thorn Lighting is constantly developing and improving its products. The right is reserved to change specifications without prior notification or public announcement.
© Thorn Lighting

Areaflood Pro

96644688 <AFP L 144L70-740 EWR HFX CL1 GY

Thorn Lighting is constantly developing and improving its products. The right is reserved to change specifications without prior notification or public announcement.
© Thorn Lighting