Areaflood Pro

96644712 <AFP S 24L35-740 A5 BS 3550 CL1 GY

CB Certificate	ISO 9223 C5		IP66	IK08		CE				Ta -25 +35

Areaflood Pro

A compact, lightweight, general purpose LED area floodlight. With small body. LED converter configured for power reduction, effective 3 hours before and 5 hours after a calculated midnight, driving 24 LEDs at 350mA with asymmetrical 50° light distribution. IP66, IK08, Class I electrical. Body: die-cast aluminium (EN AC-44300), Light grey 150 sanded textured (close to RAL9006).. Enclosure: 4mm thick toughened glass. Reversable mounting stirrup supplied, Complete with 4000K LED.

Not compatible with UrbaSens systems.

Dimensions: 462 x 265 x 139 mm
Luminaire input power: 28 W
Luminaire luminous flux: 4160 lm
Luminaire efficacy: 149 lm/W
weight: 6.18 kg
Scx: 0.05 m²

TLG_AFLP_F_SMALLPDB.jpg

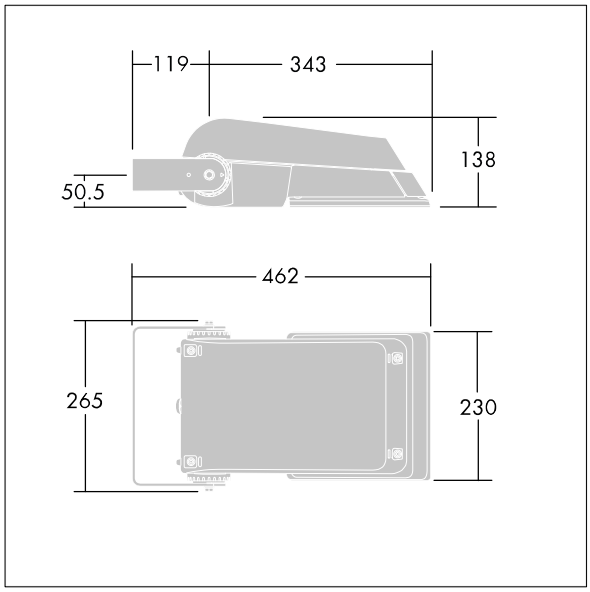

TLG_AFLP_M_SML.wmf

This product contains light sources of energy efficiency class D.

All values marked with an * are rated values. Thorn uses tried and tested components from leading suppliers, however there may be isolated instances of technology-related failures of individual LEDs during the rated product lifetime. International standards set the tolerance in initial flux and connected load at ±10%. Unless stated otherwise, the values apply to an ambient temperature of 25°C.

Thorn Lighting is constantly developing and improving its products. The right is reserved to change specifications without prior notification or public announcement.
© Thorn Lighting