Areaflood Pro

96644784 AFP S 36L35-740 WR HFX CL2 GY

CB Certificate	ISO 9223 C5		IP66	IK08		CE				Ta -25 +35

Areaflood Pro

A compact, lightweight, general purpose LED area floodlight. With small body. LED converter configured for DALI control over additional wires, driving 36 LEDs at 350mA with Wide Road light distribution. IP66, IK08, Class II electrical. Body: die-cast aluminium (EN AC-44300), Light grey 150 sanded textured (close to RAL9006).. Enclosure: 4mm thick toughened glass. Reversable mounting stirrup supplied, Complete with 4000K LED.

TLG_AFLP_F_SMALLPDB.jpg

Dimensions: 462 x 265 x 139 mm
Luminaire input power: 39 W
Luminaire luminous flux: 6354 lm
Luminaire efficacy: 163 lm/W
weight: 6.23 kg
Scx: 0.05 m²

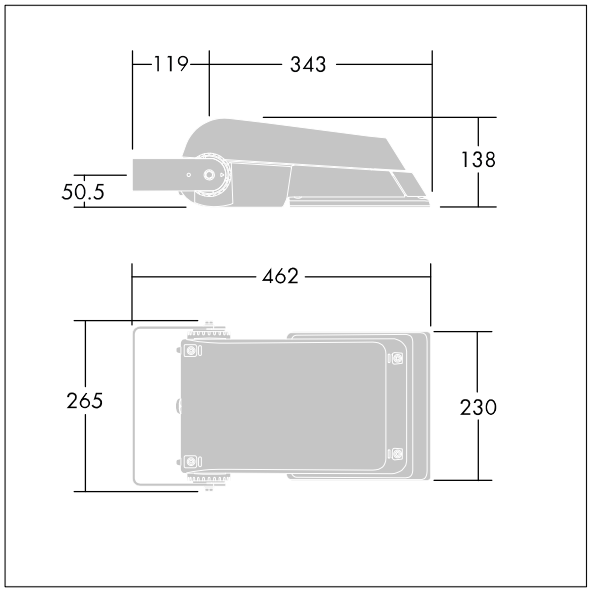

TLG_AFLP_M_SML.wmf

This product contains light sources of energy efficiency class E.

All values marked with an * are rated values. Thorn uses tried and tested components from leading suppliers, however there may be isolated instances of technology-related failures of individual LEDs during the rated product lifetime. International standards set the tolerance in initial flux and connected load at ±10%. Unless stated otherwise, the values apply to an ambient temperature of 25°C.

Thorn Lighting is constantly developing and improving its products. The right is reserved to change specifications without prior notification or public announcement.
© Thorn Lighting