Urba Deco

96273035 <UD 48L35 740 SC CL BPS HFX CL1 W6 T60T

ISO 9223 C3		IP66	IK10		CE			T_a35

Urba Deco

A smart, sophisticated architectural urban lantern with 48 LEDs driven at 350mA and a Street & Comfort optic. Electronic, fixed output control gear. Class I electrical, IP66, Impact strength: IK10. Canopy and base: die-cast aluminium (AS9U3, LM24 equivalent, EN AC-46000) textured black (close to RAL9005). Enclosure: 6mm thick clear glass. Arms: die-cast aluminium textured black (close to RAL9005) covered with a shield in plastic ASA. Pre-wired with 6m cable. Post top mounting to Ø60mm column, luminaire perpendicular to the road. Equipped with power reduction circuit, effective 3 hours before and 5 hours after a calculated midnight. It can be deactivated at installation with an easily accessible internal switch. DALI controllable with additional signal cables. Complete with 4000K LED.

Surge protection: 10kV single pulse common mode and 8kV multipulse common mode and 6kV multipulse differential mode. If permanent DALI system is connected, 6kV multipulse common and differential mode.

Dimensions: 510 x 241 x 474 mm
Luminaire input power: 49.1 W
Luminaire luminous flux: 8165 lm
Luminaire efficacy: 166 lm/W
Weight: 7.5 kg
Scx: 0.049 m²

TLG_URBD_F_MTPPDB.jpg

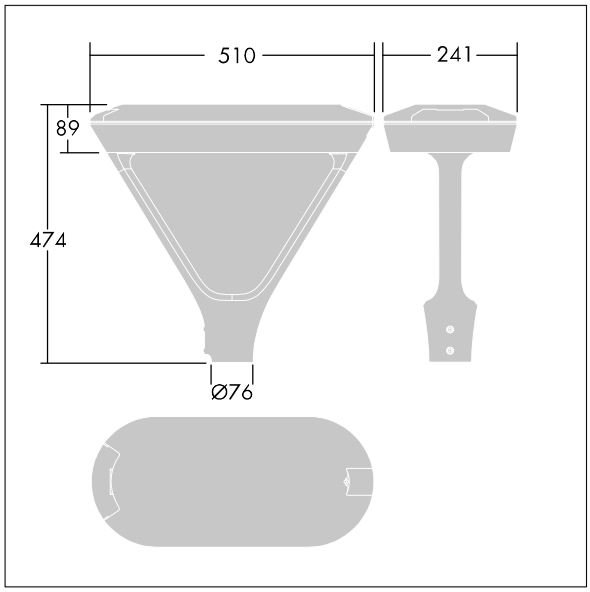

TLG_URBD_M_MTP.wmf

This product contains a light source of energy efficiency class D.

All values marked with an * are rated values. Thorn uses tried and tested components from leading suppliers, however there may be isolated instances of technology-related failures of individual LEDs during the rated product lifetime. International standards set the tolerance in initial flux and connected load at ±10%. Unless stated otherwise, the values apply to an ambient temperature of 25°C.

Thorn Lighting is constantly developing and improving its products. The right is reserved to change specifications without prior notification or public announcement.
© Thorn Lighting

Urba Deco

96273035 <UD 48L35 740 SC CL BPS HFX CL1 W6 T60T

Thorn Lighting is constantly developing and improving its products. The right is reserved to change specifications without prior notification or public announcement.
© Thorn Lighting