Urba Deco

96273982 <UD24L50 740 WSC-S PR BPSHFX CL1 W6 T76L

ISO 9223 C3		IP66	IK10		CE			T_a35

Urba Deco

A smart, sophisticated architectural urban lantern with 24 LEDs driven at 500mA and a Wide Street & Comfort optic. Electronic, fixed output control gear. Class I electrical, IP66, Impact strength: IK10. Canopy and base: die-cast aluminium (AS9U3, LM24 equivalent, EN AC-46000) textured black (close to RAL9005). Enclosure: 6mm thick prismatic glass. Arms: die-cast aluminium textured black (close to RAL9005) covered with a shield in plastic ASA. Pre-wired with 6m cable. Post top mounting to Ø76mm column, luminaire parallel to the road. Equipped with power reduction circuit, effective 3 hours before and 5 hours after a calculated midnight. It can be deactivated at installation with an easily accessible internal switch. DALI controllable with additional signal cables. Complete with 4000K LED.

Surge protection: 10kV single pulse common mode and 8kV multipulse common mode and 6kV multipulse differential mode. If permanent DALI system is connected, 6kV multipulse common and differential mode.

Dimensions: 241 x 510 x 494 mm
Luminaire input power: 36.1 W
Luminaire luminous flux: 5502 lm
Luminaire efficacy: 152 lm/W
Weight: 7.85 kg
Scx: 0.051 m²

TLG_URBD_F_MTPPRPDBLIT1.jpg

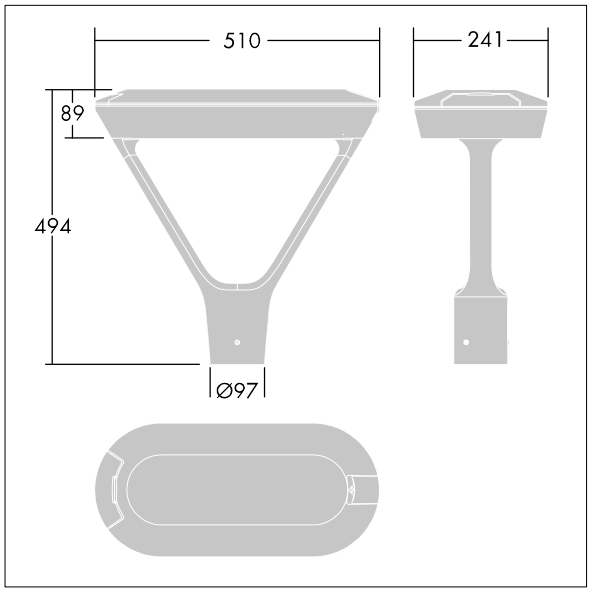

TLG_URBD_M_MTP D89.wmf

This product contains a light source of energy efficiency class D.

All values marked with an * are rated values. Thorn uses tried and tested components from leading suppliers, however there may be isolated instances of technology-related failures of individual LEDs during the rated product lifetime. International standards set the tolerance in initial flux and connected load at ±10%. Unless stated otherwise, the values apply to an ambient temperature of 25°C.

Thorn Lighting is constantly developing and improving its products. The right is reserved to change specifications without prior notification or public announcement.
© Thorn Lighting