CiviTEQ

96665689 CQ 72L50 740 NR BS 3550 CL1 M76 ANT

CB Certificate	ISO 9223 C5	PLUS	11	IP66	IK08		CE		EAC			T_a25

CiviTEQ

A large size LED road lighting lantern with 72 LEDs driven at 500mA with Narrow Road optic. Electronic, fixed output control gear. Class I electrical, IP66, IK08. Housing: die-cast aluminium (EN AC-44300), powder coated anthracite (close to RAL7043). Enclosure: toughened flat glass. White framed with etched border. Screws: stainless steel, Ecolubric® treated. Supplied with Ø76mm spigot adaptor which can be fitted for post-top (0°/5°/10° tilt) or side-entry (-20°/-15°/-10°/-5°/0° tilt). Equipped with 50% power reduction circuit, effective 3 hours before and 5 hours after a calculated midnight. It can be deactivated at installation with an easily accessible internal switch. Complete with 4000K LED. Surge protection: 10kV single pulse common mode and 8kV multipulse common mode and 6kV multipulse differential mode. If permanent DALI system is connected, 6kV multipulse common and differential mode.

Dimensions: 580 x 230 x 160 mm
Luminaire input power: 104.8 W
Luminaire luminous flux: 17588 lm
Luminaire efficacy: 168 lm/W
Weight: 10.09 kg
Scx: 0.115 m²

TLG_CTEQ_F_LMTP76ANTPDB.jpg

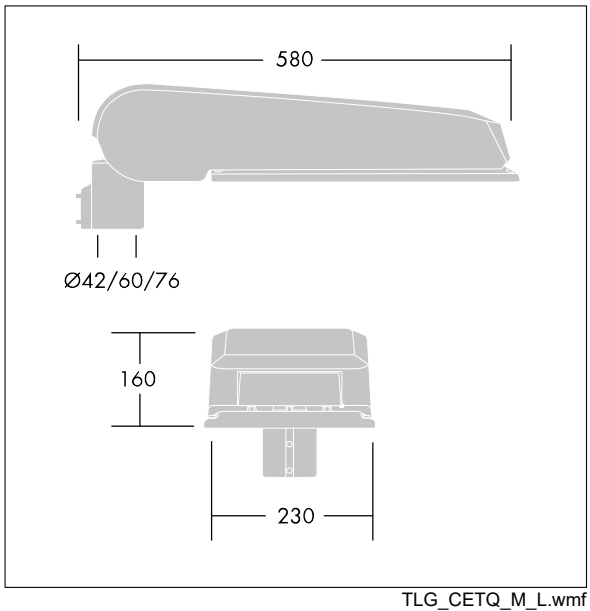

TLG_CETQ_M_L.wmf

This product contains light sources of energy efficiency class E.

All values marked with an * are rated values. Thorn uses tried and tested components from leading suppliers, however there may be isolated instances of technology-related failures of individual LEDs during the rated product lifetime. International standards set the tolerance in initial flux and connected load at ±10%. Unless stated otherwise, the values apply to an ambient temperature of 25°C.

Thorn Lighting is constantly developing and improving its products. The right is reserved to change specifications without prior notification or public announcement.
© Thorn Lighting

CiviTEQ

96665689 CQ 72L50 740 NR BS 3550 CL1 M76 ANT

Thorn Lighting is constantly developing and improving its products. The right is reserved to change specifications without prior notification or public announcement.
© Thorn Lighting