EyeKon LED

96665860 EYE CR LED600-840 HF E3 S ANT

EN 55015 | IP65 | IK10 | 850°C | Ta 0 +25

EyeKon LED

Round, impact resistant LED bulkhead luminaire. Electronic, fixed output control gear with 3 hour, manual test, emergency lighting circuit. Class I electrical, IP65, IK10. Body: small size, die-cast aluminium (LM6), powder coated anthracite. Diffuser: opal polycarbonate with die-cast aluminium cross feature. Electrical connection via 4 x 2 x 2.5mm² terminal block. Complete with 4000K LED

Dimensions: Ø285 x 150 mm
Luminaire input power: 7 W
Weight: 2.8 kg

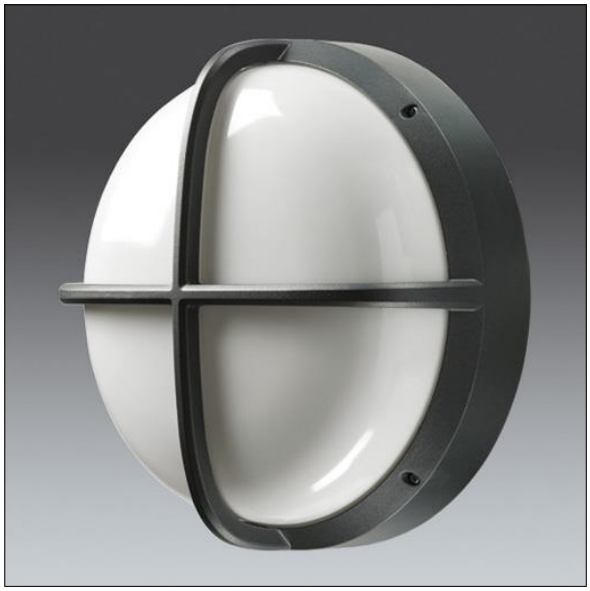

TLG_EYKN_F_SMCRSANTHOP.jpg

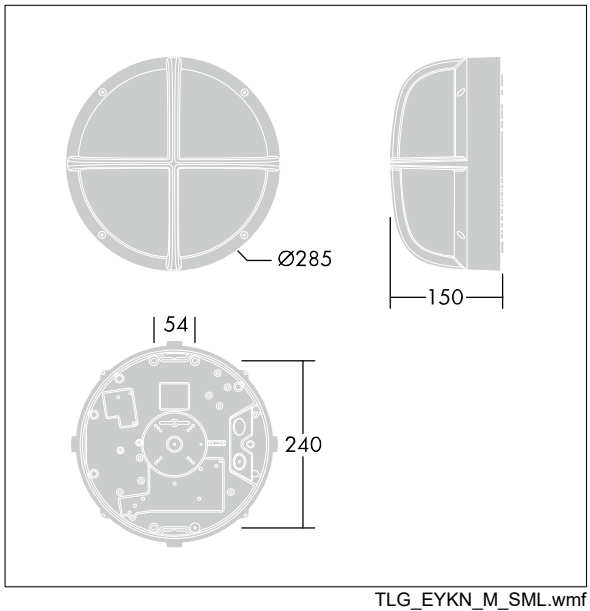

TLG_EYKN_M_SML.wmf

This product contains a light source of energy efficiency class C.

All values marked with an * are rated values. Thorn uses tried and tested components from leading suppliers, however there may be isolated instances of technology-related failures of individual LEDs during the rated product lifetime. International standards set the tolerance in initial flux and connected load at ±10%. Unless stated otherwise, the values apply to an ambient temperature of 25°C.

Thorn Lighting is constantly developing and improving its products. The right is reserved to change specifications without prior notification or public announcement.
© Thorn Lighting

EyeKon LED

96665860 EYE CR LED600-840 HF E3 S ANT

Thorn Lighting is constantly developing and improving its products. The right is reserved to change specifications without prior notification or public announcement.
© Thorn Lighting