Tonic Spot

96665986 <TONIC SPOT LED2800-930 MT3 SP WH

IP20 | CE | EAC | Ta25

Tonic Spot

An LED spotlight with spot distribution and integral fixed output control gear, for 100-240V, 50/60Hz supply. Track mounted (or surface mounted using adaptor accessory) via global GA69 3-phase adaptor. Class I electrical, IP20. Body: die-cast aluminium, painted white. Driver box: white polycarbonate. Complete with 3000K LED. Spotlight can be rotated through 350° and tilted up to 90°. Light distribution can be altered by changing the lens and / or using external attachments.

Dimensions: Ø95 x 187 mm
Luminaire input power: 30.7 W
Luminaire luminous flux: 2856 lm
Luminaire efficacy: 93 lm/W
Weight: 1.1 kg

TLG_TNCS_F_WH.jpg

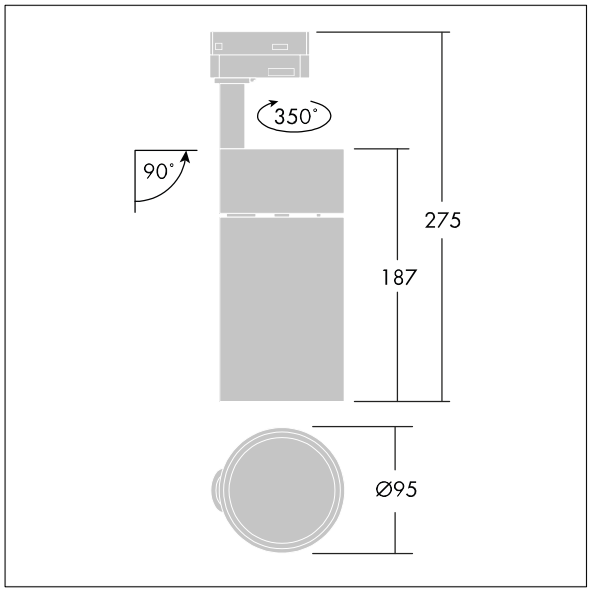

TLG_TONC_M_LD1.wmf

All values marked with an * are rated values. Thorn uses tried and tested components from leading suppliers, however there may be isolated instances of technology-related failures of individual LEDs during the rated product lifetime. International standards set the tolerance in initial flux and connected load at ±10%. Unless stated otherwise, the values apply to an ambient temperature of 25°C.

Thorn Lighting is constantly developing and improving its products. The right is reserved to change specifications without prior notification or public announcement.
© Thorn Lighting

Tonic Spot

96665986 <TONIC SPOT LED2800-930 MT3 SP WH

Thorn Lighting is constantly developing and improving its products. The right is reserved to change specifications without prior notification or public announcement.
© Thorn Lighting