IQ Wave

92900336 IQ WAVE LED3100-830 HFIX E3 Q597 MRE

IP20 IP44 | IK03 | 650°C | Ta 0 +25

IQ Wave

Recessed modular, direct LED luminaire. Electronic, DALI dimmable control gear with 3 hour, manual test, emergency lighting circuit. Class I electrical, IP44_IP20, IK03. Body: highly reflective steel. Frame and end caps: polycarbonate. Diffuser: polycarbonate with aluminium heatsink. Gear tray: powder coated white steel. Suitable for lay in or pull up (with accessory) installation. Complete with 3000K LED

Dimensions: 597 x 597 x 97 mm
Luminaire input power: 30 W
Luminaire luminous flux: 3050 lm
Luminaire efficacy: 102 lm/W
Weight: 4.4 kg

TLG_IQWV_F_PDB.jpg

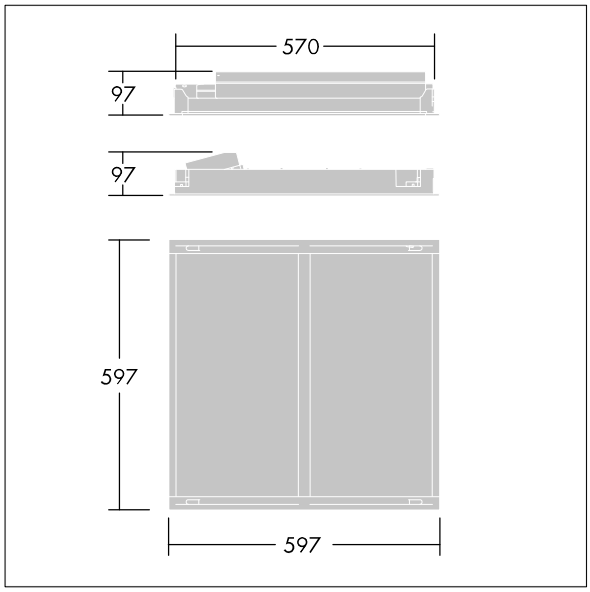

TLG_IQWV_M_600.wmf

This product contains a light source of energy efficiency class D.

All values marked with an * are rated values. Thorn uses tried and tested components from leading suppliers, however there may be isolated instances of technology-related failures of individual LEDs during the rated product lifetime. International standards set the tolerance in initial flux and connected load at ±10%. Unless stated otherwise, the values apply to an ambient temperature of 25°C.

Thorn Lighting is constantly developing and improving its products. The right is reserved to change specifications without prior notification or public announcement.
© Thorn Lighting

IQ Wave

92900336 IQ WAVE LED3100-830 HFIX E3 Q597 MRE

Thorn Lighting is constantly developing and improving its products. The right is reserved to change specifications without prior notification or public announcement.
© Thorn Lighting