Thor

96665283 <TR 36L35-740 SC BPS HFX CL2 FD W6 L60E

ISO 9223 C5		IP66	IK10		CE				T_a25

Thor

A small size, smart urban LED lantern with 36 LEDs driven at 350mA with Street & Comfort optic and die-cast aluminium EN AC 47100 + CAT dome with anthracite finish (close to RAL7043). Class II electrical, IP66, IK10. Body: die-cast aluminium (EN AC 47100 + CAT) treated against corrosion, powder coated anthracite (close to RAL7043), bracket: die-cast aluminium (EN AC-47100 + CAT) treated against corrosion, powder coated anthracite (close to RAL7043). Enclosure: 6mm toughened flat glass. Screws and closing set: stainless steel. Pre-wired with 6m cable for mains and DALI control. Side entry mounting to Ø60mm spigot, tilt 0°, adjustable from -15° to +10°. Equipped with 50% power reduction circuit, effective 3 hours before and 5 hours after a calculated midnight. It can be deactivated at installation with an easily accessible internal switch. Complete with 4000K LED.

Dimensions: Ø459 x 171 mm
Luminaire input power: 39 W
Luminaire luminous flux: 6227 lm
Luminaire efficacy: 160 lm/W
Weight: 10 kg
Scx: 0.038 m²

TLG_THOR_F_SMLEFD.jpg

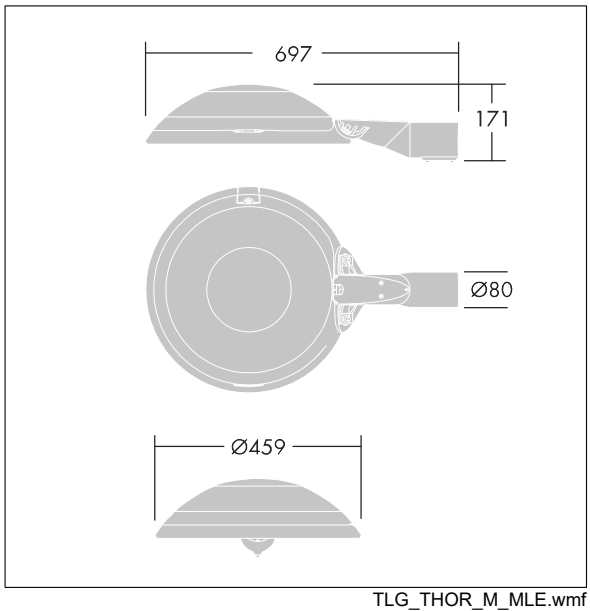

TLG_THOR_M_MLE.wmf

This product contains light sources of energy efficiency class E.

All values marked with an * are rated values. Thorn uses tried and tested components from leading suppliers, however there may be isolated instances of technology-related failures of individual LEDs during the rated product lifetime. International standards set the tolerance in initial flux and connected load at ±10%. Unless stated otherwise, the values apply to an ambient temperature of 25°C.

Thorn Lighting is constantly developing and improving its products. The right is reserved to change specifications without prior notification or public announcement.
© Thorn Lighting