Thor

96665294 <TR 36L50-730 RWT BPS HFX CL2 OP W6 L60E

ISO 9223 C5 | IP66 | IK10 | T_a25

Thor

A small size, smart urban LED lantern with 36 LEDs driven at 500mA with Wet Road optic and UV stabilised polycarbonate dome with opal finish. Class II electrical, IP66, IK10. Body: die-cast aluminium (EN AC 47100 + CAT) treated against corrosion, powder coated anthracite (close to RAL7043), bracket: die-cast aluminium (EN AC-47100 + CAT) treated against corrosion, powder coated anthracite (close to RAL7043). Enclosure: 6mm toughened flat glass. Screws and closing set: stainless steel. Pre-wired with 6m cable for mains and DALI control. Side entry mounting to Ø60mm spigot, tilt 0°, adjustable from -15° to +10°. Equipped with 50% power reduction circuit, effective 3 hours before and 5 hours after a calculated midnight. It can be deactivated at installation with an easily accessible internal switch. Complete with 3000K LED.

Dimensions: Ø459 x 171 mm
Luminaire input power: 61 W
Luminaire luminous flux: 7825 lm
Luminaire efficacy: 128 lm/W
Weight: 10.6 kg
Scx: 0.038 m²

TLG_THOR_F_SMLEOP.jpg

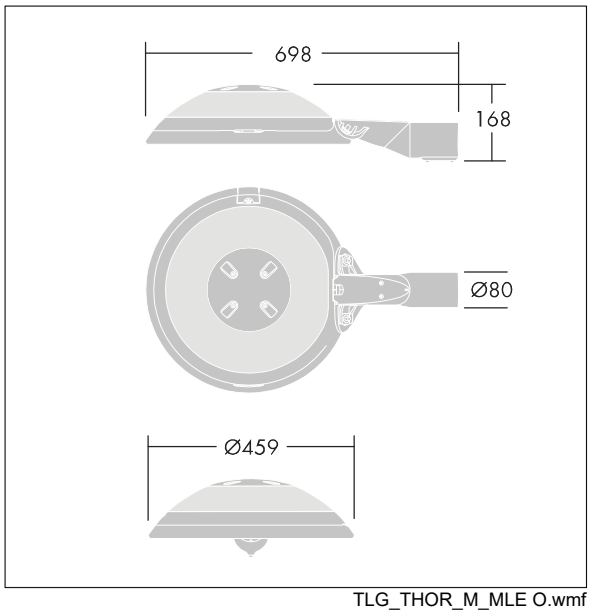

TLG_THOR_M_MLE O.wmf

This product contains light sources of energy efficiency class D.

All values marked with an * are rated values. Thorn uses tried and tested components from leading suppliers, however there may be isolated instances of technology-related failures of individual LEDs during the rated product lifetime. International standards set the tolerance in initial flux and connected load at ±10%. Unless stated otherwise, the values apply to an ambient temperature of 25°C.

Thorn Lighting is constantly developing and improving its products. The right is reserved to change specifications without prior notification or public announcement.
© Thorn Lighting

Thor

96665294 <TR 36L50-730 RWT BPS HFX CL2 OP W6 L60E

Thorn Lighting is constantly developing and improving its products. The right is reserved to change specifications without prior notification or public announcement.
© Thorn Lighting