# CiviTEQ

## 96665764 CQ XL 144L50-740 WS BPS CL2 M60 GY

IP66 | IK08

## CiviTEQ

A  size LED road lighting lantern with 144 LEDs driven at 500mA with Wide Street optic. Electronic, fixed output control gear. Class II electrical, IP66, IK08. Housing: die-cast aluminium,  Light grey 150 sanded textured (close to RAL9006). Enclosure: toughened flat glass.  Screws: stainless steel, Ecolubric® treated. Supplied with Ø60mm spigot adaptor which can be fitted for post-top (0°/5°/10° tilt) or side-entry (-20°/-15°/-10°/-5°/0° tilt).  Complete with 4000K LED. Surge protection: 10kV single pulse common mode and 8kV multipulse common mode and 6kV multipulse differential mode. If permanent DALI system is connected, 6kV multipulse common and differential mode.

Dimensions: 761 x 490 x 139 mm
Luminaire input power: 211 W
Luminaire luminous flux: 33911 lm
Luminaire efficacy: 161 lm/W
Weight: 20.1 kg
Scx: 0.063 m²

TLG_CTEQ_F_XL.jpg

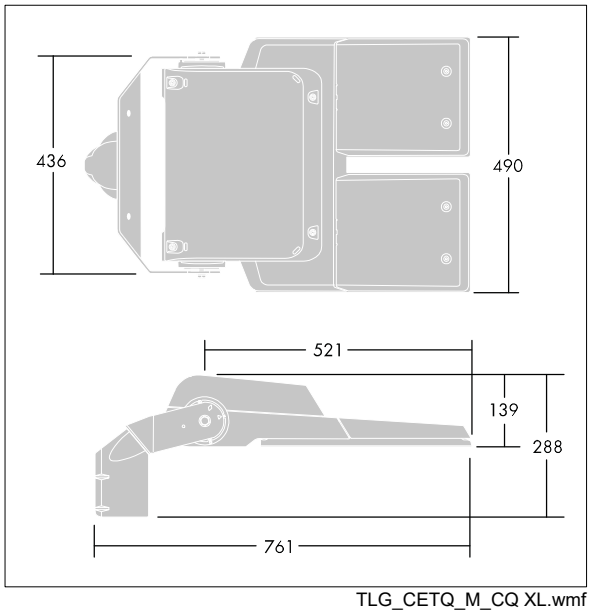


TLG_CETQ_M_CQ XL.wmf

This product contains light sources of energy efficiency class E.

All values marked with an * are rated values. Thorn uses tried and tested components from leading suppliers, however there may be isolated instances of technology-related failures of individual LEDs during the rated product lifetime.  International standards set the tolerance in initial flux and connected load at ±10%. Unless stated otherwise, the values apply to an ambient temperature of 25°C.

Thorn Lighting is constantly developing and improving its products. The right is reserved to change specifications without prior notification or public announcement.
© Thorn Lighting