Voyager Solid

96629763 <VOYAGER SOLID MS E3D-S WH

IEC EN 60598-1 RG 0	IP65	IK07	CE	T_a 5 40

Voyager Solid

IP65 LED safety luminaire for surface ceiling mounting. Semi-recessed mounting possible with optional mounting frame. Electronic, fixed output control gear with 3 hour, Self/DALI Addressable test, emergency lighting circuit.. Body: white polycarbonate. Cover: transparent polycarbonate. Class II electrical. Internal ISO legends available for 23 m viewing distance (96629767, to be ordered separately).

Self-contained emergency luminaires rely on long-lasting batteries. Voyager Solid's high-tech battery is robust and comes with a three-year guarantee (applicable subject to the terms and conditions of and to the extent as set forth in the manufacturer's guarantee on Thorn products, which shall be applicable analogously and which is available under http://www.thornlighting.com/en/products/5-year-guarantee/5-year-warranty/terms-of-guarantee_en.pdf. The battery guarantee shall not come into effect if the product has been installed later than three(3) months after delivery EXW (Incoterms 2010).

Dimensions: 280 x 130 x 71 mm
Luminaire input power: 3.5 W
Weight: 0.63 kg

TLG_VYSO_F_OPS.jpg

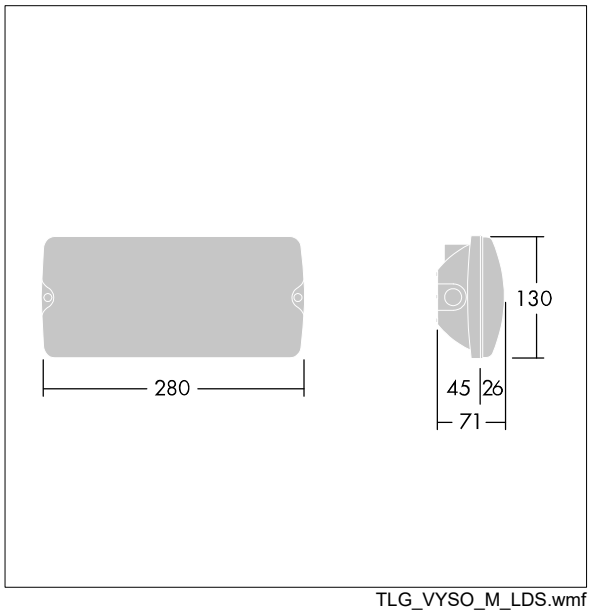

TLG_VYSO_M_LDS.wmf

All values marked with an * are rated values. Thorn uses tried and tested components from leading suppliers, however there may be isolated instances of technology-related failures of individual LEDs during the rated product lifetime. International standards set the tolerance in initial flux and connected load at ±10%. Unless stated otherwise, the values apply to an ambient temperature of 25°C.

Thorn Lighting is constantly developing and improving its products. The right is reserved to change specifications without prior notification or public announcement.
© Thorn Lighting