Tonic Recessed Spotlight

THORN

<TONIC RS2 LED2800-930 HF FL WH 96629334

Adjustable LED spotlight

Double, adjustable, recessed LED spotlight in a frame with flood distribution and integral fixed output control gear, for 100-240V, 50/60Hz supply. Class I electrical, IP20. Body: die-cast aluminium, painted. Complete with 3000K LED, Colour Rendering Index min.: 90. Spotlight can be rotated through 355° and tilted up to 75°. Light distribution can be altered by changing the lens and / or using external attachments.

Dimensions: 330 x 175 x 180 mm
Luminaire input power: 61.4 W
Luminaire luminous flux: 5564 lm
Luminaire efficacy: 91 lm/W
Weight: 3.4 kg

TLG_TNCG_F_2W_PERS.jpg

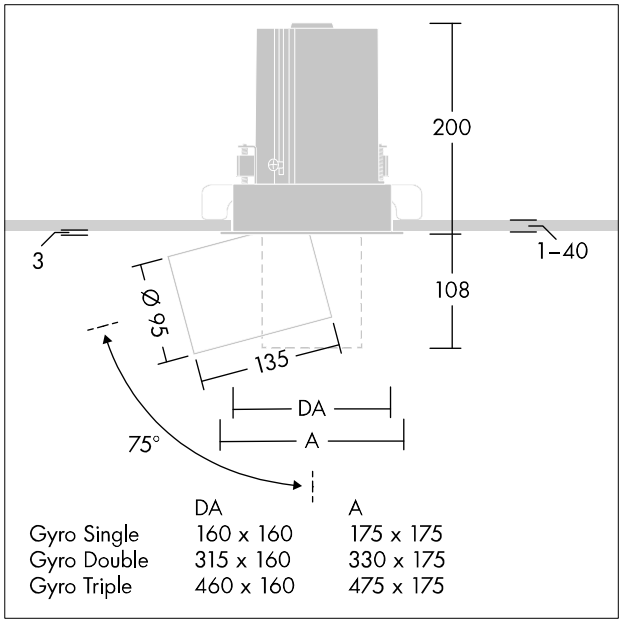

TLG_TNCG_M_LD1.wmf

Light Distribution

All values marked with an * are rated values. Thorn uses tried and tested components from leading suppliers, however there may be isolated instances of technology-related failures of individual LEDs during the rated product lifetime. International standards set the tolerance in initial flux and connected load at ±10%. Unless stated otherwise, the values apply to an ambient temperature of 25°C.

IP20 Ta25

Thorn Lighting is constantly developing and improving its products. The right is reserved to change specifications without prior notification or public announcement.
© Thorn Lighting