<TONIC GIMBAL LED1800-930 HF FL

96629343

Lamp

Light head for Tonic Gimbal. Twist and lock fixing into installation frame (to be ordered separately). Distribution: flood. Complete with 3000K LED, CRI>90.

Dimensions: Ø160 x 134 mm
Luminaire input power: 19.6 W
Luminaire luminous flux: 1740 lm
Luminaire efficacy: 89 lm/W
Weight: 1 kg

TLG_TNCC_F_PERSHEAD24.jpg

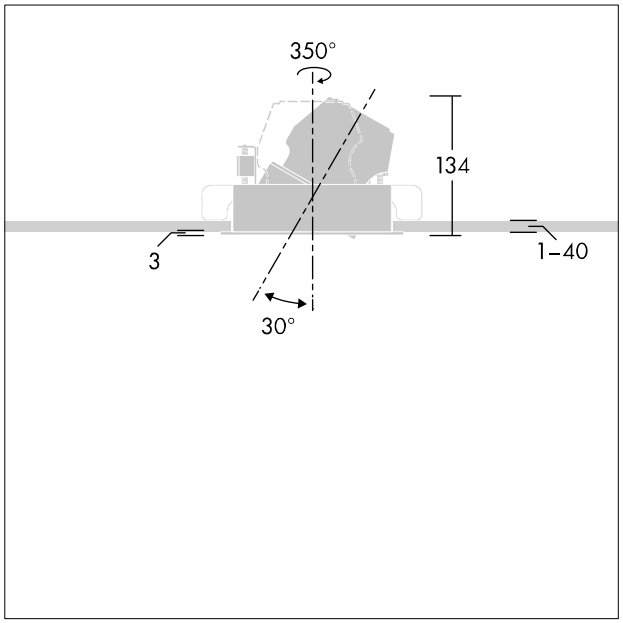

TLG_TNCC_M_LDHEAD.wmf

All values marked with an * are rated values. Thorn uses tried and tested components from leading suppliers, however there may be isolated instances of technology-related failures of individual LEDs during the rated product lifetime. International standards set the tolerance in initial flux and connected load at ±10%. Unless stated otherwise, the values apply to an ambient temperature of 25°C.

IP20 Ta25

Thorn Lighting is constantly developing and improving its products. The right is reserved to change specifications without prior notification or public announcement.
© Thorn Lighting

Thorn Lighting is constantly developing and improving its products. The right is reserved to change specifications without prior notification or public announcement.
© Thorn Lighting