Thor

96630232 TR 72L50-730 RC CL2 FD MCA 12M

ISO 9223 C5	IP66	IK08		CE				T_a 0 +25

Thor

A large size, smart urban LED lantern with 72 LEDs driven at 500mA with Road & Comfort optic and UV stabilised polycarbonate dome with anthracite finish (close to RAL7043). Class II electrical, IP66, IK08. Body, bracket and ring: die-cast aluminium (AS12U, LM6 equivalent, EN AC-44300) treated against corrosion, powder coated anthracite (close to RAL7043). Enclosure: 4mm toughened flat glass. Screws and closing set: stainless steel. Pre-wired with 12m cable. Catenary mounted Complete with 3000K LED.

Dimensions: Ø577 x 312 mm
Luminaire input power: 109 W
Luminaire luminous flux: 14560 lm
Luminaire efficacy: 134 lm/W
Weight: 15 kg
Scx: 0.044 m²

TLG_THOR_F_SMCA.jpg

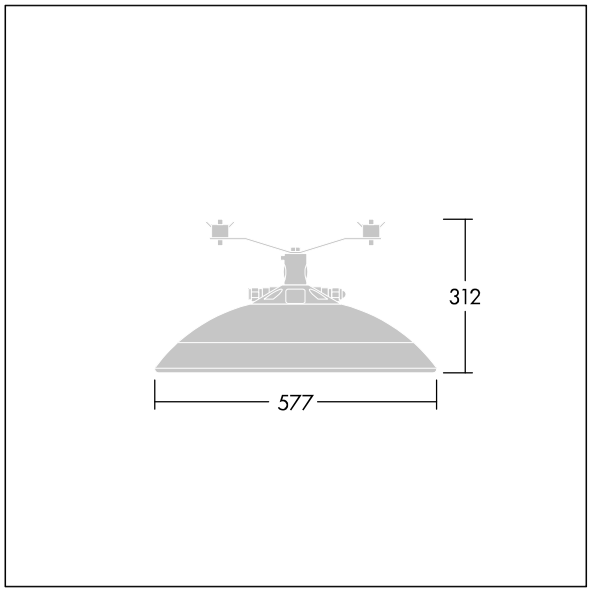

TLG_THOR_M_MCA_L.wmf

This product contains light sources of energy efficiency class D.

All values marked with an * are rated values. Thorn uses tried and tested components from leading suppliers, however there may be isolated instances of technology-related failures of individual LEDs during the rated product lifetime. International standards set the tolerance in initial flux and connected load at ±10%. Unless stated otherwise, the values apply to an ambient temperature of 25°C.

Thorn Lighting is constantly developing and improving its products. The right is reserved to change specifications without prior notification or public announcement.
© Thorn Lighting