96631427 ALTISLEDG3 GB 264L70 200-440 DA

IP66 IK08

Class I, 1000W constant current DALI 2 programmable gearbox, with 2 independant output channels and IP66 enclosure, for TV broadcasting applications. Suitable for dedicated 264 LED Altis and Champion floodlight, to be installed remotely up to 200m from the floodlight. Nominal input voltage: 200-440, output current 700mA with DALI 2 configurable single-channel, IEEE 1789 flicker recommended practice compliant suitable for super slow motion camera filming, surge level 10kV for both common mode and differential.

Connection from mains via terminal blocks. Mains supply must be fused according to local safety regulations.

Weight: 5.4 kg

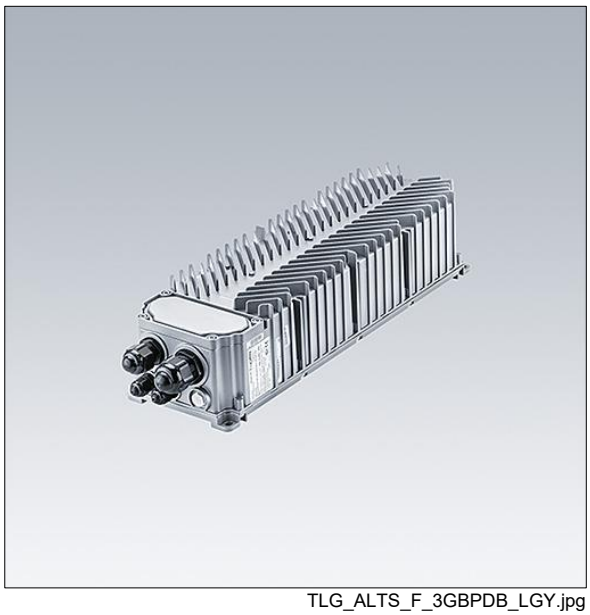

TLG_ALTS_F_3GBPDB_LGY.jpg

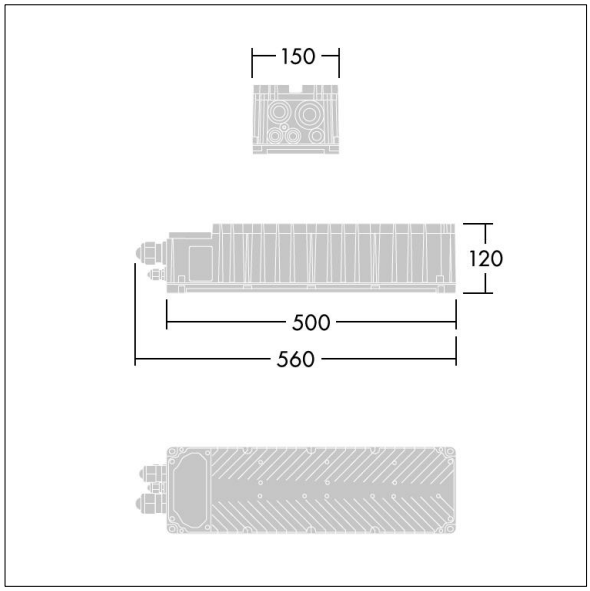

TLG_ALSA_M_GEARBOX.wmf

All values marked with an * are rated values. Unless stated otherwise, the values apply to an ambient temperature of 25°C.

Thorn Lighting is constantly developing and improving its products. The right is reserved to change specifications without prior notification or public announcement.
© Thorn Lighting