Voyager Star

96631643 VOYAGER STAR MRCR ANT ECC SR

IP 20 40 | halogen | CE

Voyager Star

High performance, ceiling recessed LED emergency lighting luminaire, Luminaire for central emergency light supply, with circuit monitoring, without single monitoring of the luminaire with open area optic. Luminaire in maintained mode. Housing: die-cast aluminium, powder coated silver grey (close to RAL 9006). Gear box for mounting in ceiling recess:. IP20_IP40, Ceiling recessed luminaire for 68 mm ceiling cut-out and ceiling thickness from 1 - 25 mm. Lens: polycarbonate. Luminaire can be installed quickly and maintained without tools. Electrical connection (230VAC) via maximum 2.5mm² cable, loop in - loop out possible. Optimum thermal management via heat sink. Maintained mode: -20°C to +30°C, non-maintained mode: -20°C to +35°C; power supply: 220-240 V AC (+/- 10%) 50-60 Hz; 176-280 V DC Suitable for recessed installation in concrete casting surround (please order separately). Complete with LEDs.. Ceiling cutout Ø68mm in ceiling thicknesses 1-25mm.

Luminaire input power: 3 W
Dimensions: Ø85 x 2 mm
Weight: 1 kg

TLG_VSTR_F_MRCR_ECx_ANT_SR.jpg

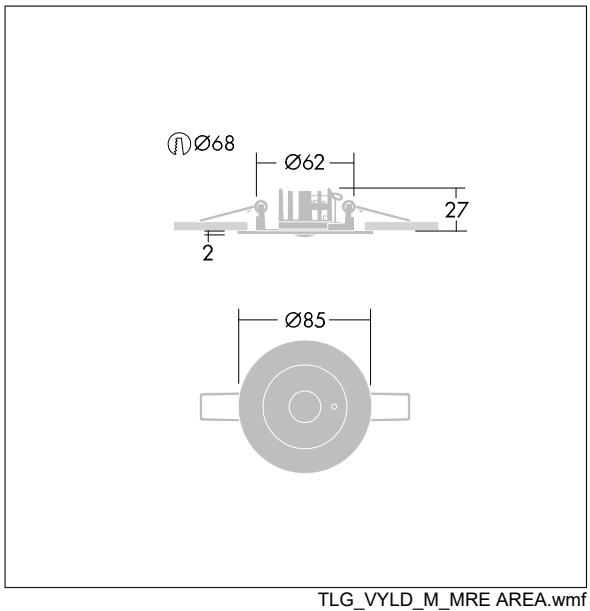

TLG_VYLD_M_MRE AREA.wmf

All values marked with an * are rated values. Thorn uses tried and tested components from leading suppliers, however there may be isolated instances of technology-related failures of individual LEDs during the rated product lifetime. International standards set the tolerance in initial flux and connected load at ±10%. Unless stated otherwise, the values apply to an ambient temperature of 25°C.

Thorn Lighting is constantly developing and improving its products. The right is reserved to change specifications without prior notification or public announcement.
© Thorn Lighting

Voyager Star

96631643 VOYAGER STAR MRCR ANT ECC SR

Thorn Lighting is constantly developing and improving its products. The right is reserved to change specifications without prior notification or public announcement.
© Thorn Lighting