Raze Bollard

96631723 RAB 1L35-730 WP HF CL1 6K 700 ANT

ISO 9223 C5 | IP66 | IK10

Raze Bollard

A flange mounted LED bollard of 700mm height, incorporating Thorn's Flat beam® technology. 1 LED driven at 350mA. Integral LED driver included. Class I electrical, IP66, IK10. Housing: die-cast aluminium (EN44300, compatible with seaside installation), powder coated, textured anthracite (close to RAL7043). Bowl: UV stabilised polycarbonate, semi-frosted. Fasteners: stainless steel. Complete with 3000K LED.

6kV surge protection as standard. 200mm x 200mm fixing centres, bolts not included.

Dimensions: 173 x 220 x 700 mm
Luminaire input power: 15 W
Luminaire luminous flux: 1142 lm
Luminaire efficacy: 76 lm/W
Weight: 6.49 kg

TLG_RAZB_F_700_PDB.jpg

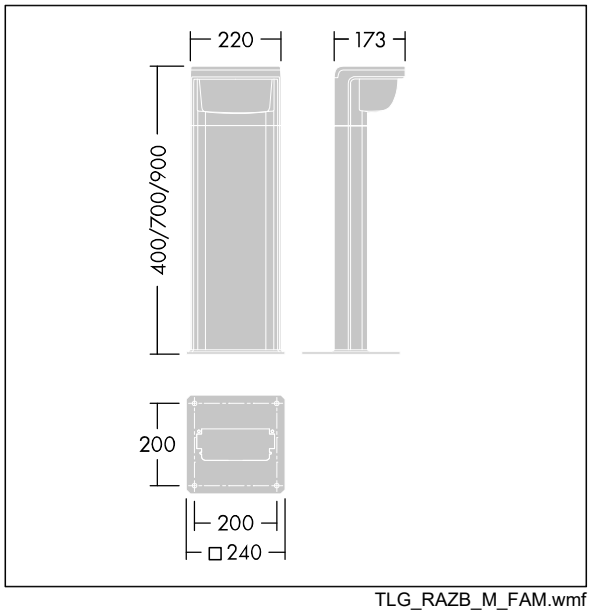

TLG_RAZB_M_FAM.wmf

This product contains a light source of energy efficiency class D.

All values marked with an * are rated values. Thorn uses tried and tested components from leading suppliers, however there may be isolated instances of technology-related failures of individual LEDs during the rated product lifetime. International standards set the tolerance in initial flux and connected load at ±10%. Unless stated otherwise, the values apply to an ambient temperature of 25°C.

Thorn Lighting is constantly developing and improving its products. The right is reserved to change specifications without prior notification or public announcement.
© Thorn Lighting

Raze Bollard

96631723 RAB 1L35-730 WP HF CL1 6K 700 ANT

Thorn Lighting is constantly developing and improving its products. The right is reserved to change specifications without prior notification or public announcement.
© Thorn Lighting