Volupto

96631904 VO 18L50-740 SF RS CL2 W5 T60 ANT

CB	ISO 9223 C5			IP66	IK10					

Volupto

A smart, post top LED lantern with a radially symmetric distribution. Programmable LED driver with 18 LEDs driven at 500mA. Class II electrical, IP66, IK10. Canopy and base: corrosion resistant die-cast powder coated aluminium, finished textured anthracite (close to RAL7043). Enclosure: UV stabilised polycarbonate. Complete with 4000K LED. Pre-wired with 5m cable. Post top mounting to Ø60mm column.

Dimensions: Ø60/406 x 571 mm
Luminaire input power: 27.8 W
Luminaire luminous flux: 3938 lm
Luminaire efficacy: 142 lm/W
Weight: 7.48 kg
Scx: 0.143 m²

TLG_VOLU_F_Side.jpg

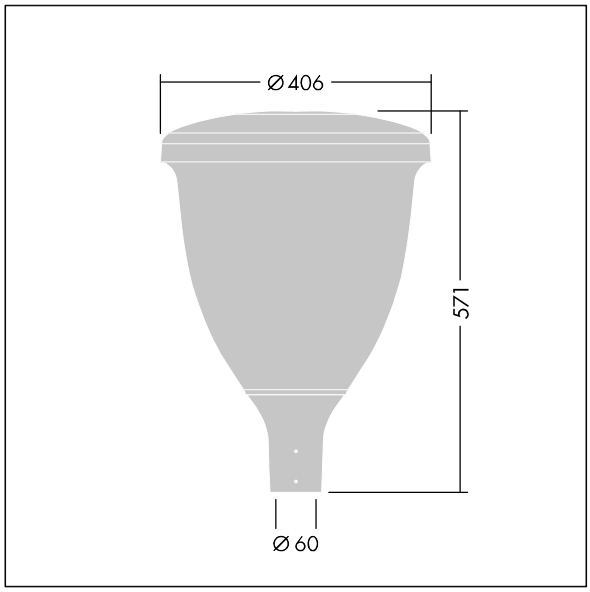

TLG_VOLU_M_60.wmf

This product contains a light source of energy efficiency class D.

All values marked with an * are rated values. Thorn uses tried and tested components from leading suppliers, however there may be isolated instances of technology-related failures of individual LEDs during the rated product lifetime. International standards set the tolerance in initial flux and connected load at ±10%. Unless stated otherwise, the values apply to an ambient temperature of 25°C.

Thorn Lighting is constantly developing and improving its products. The right is reserved to change specifications without prior notification or public announcement.
© Thorn Lighting