Katona

92906034 KAT RD 2000 840 HFI E3D

IP65 | IK10 | 850°C | Ta 0 +25

Katona

A very slim, round functional LED luminaire. DALI dimmable LED driver with 3 hour, Self/DALI Addressable test, emergency lighting circuit. Body: polycarbonate. Diffuser: opal polycarbonate. Class II electrical, IP65, IK10. Complete with 4000K LED. Suitable for direct mounting to wall or ceiling. Loop-in, loop-out is possible for cables up to 2.5mm². BESA compatible.

Dimensions: Ø307 x 58 mm
Luminaire input power: 16.3 W
Luminaire luminous flux: 1950 lm
Luminaire efficacy: 120 lm/W
Weight: 1.24 kg

Self-contained emergency luminaires rely on long-lasting batteries. This product's high-tech lithium iron phosphate battery is robust and comes with a three-year guarantee (applicable subject to the terms and conditions of and to the extent as set forth in the manufacturer's guarantee on Thorn products, which shall be applicable analogously and which is available under http://www.thornlighting.com/en/products/5-year-guarantee/5-year-warranty/terms-of-guarantee_en.pdf. The battery guarantee shall not come into effect if the product has been installed later than three (3) months after delivery EXW (Incoterms 2010))

TLG_KATO_F_RD_PDB.jpg

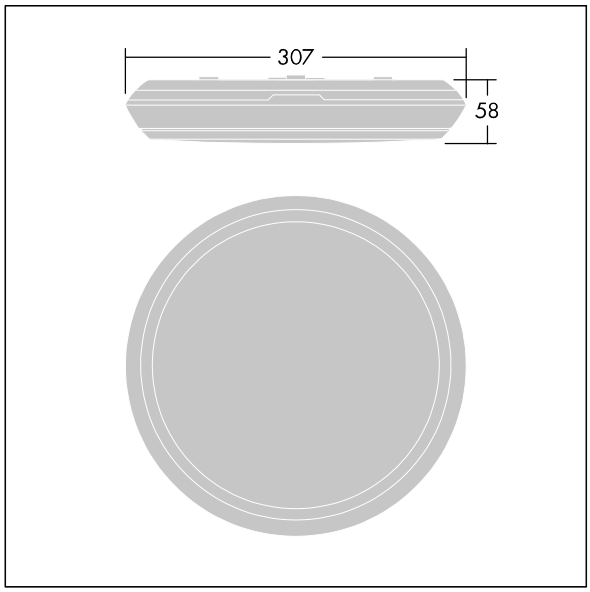

TLG_KATO_M_RD_LDS.wmf

This product contains a light source of energy efficiency class C.

All values marked with an * are rated values. Thorn uses tried and tested components from leading suppliers, however there may be isolated instances of technology-related failures of individual LEDs during the rated product lifetime. International standards set the tolerance in initial flux and connected load at ±10%. Unless stated otherwise, the values apply to an ambient temperature of 25°C.

Thorn Lighting is constantly developing and improving its products. The right is reserved to change specifications without prior notification or public announcement.
© Thorn Lighting

Katona

92906034 KAT RD 2000 840 HFI E3D

Thorn Lighting is constantly developing and improving its products. The right is reserved to change specifications without prior notification or public announcement.
© Thorn Lighting