96276601 <ALTISLEDG3 132L MB 857

ISO 9223 C5 | IP66 | IK08

A high powered LED floodlight with medium light distribution from 132 LEDs. External control gear, to be ordered separately. Class I electrical, IP66, IK08. Heatsink, frame and mounting bracket: die-cast aluminium powder coated dark sandy grey (close to RAL 7043). Cover: 5mm clear glass. Bracket mounted using fixation points available (one M20 screw or two M14 screws). Low flicker operation (<1%) suitable for HDTV broadcasting. Complete with 5700K LED with Colour Rendering Index min.: 80.

Due to the unique calculation requirements of this product the photometric data is not provided here but design advice may be obtained from your local representative.

Dimensions: 332 x 672 x 257 mm

Weight: 9.6 kg
Scx: 0.07m² at 0°

TLG_ALTS_F_V1.jpg

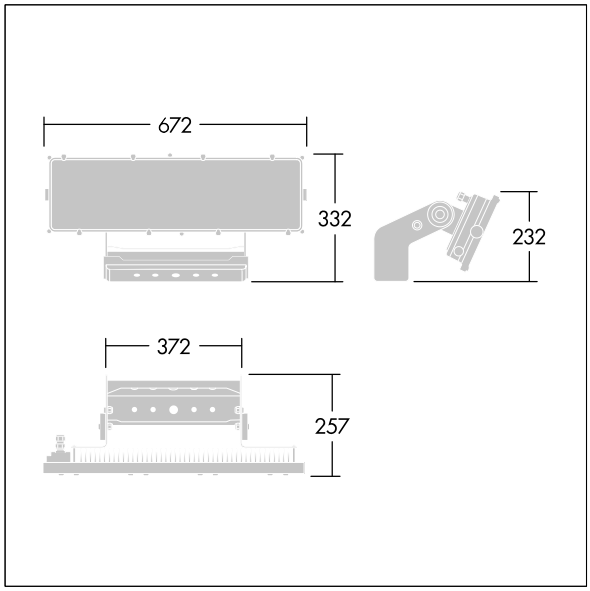

TLG_ALTS_M_LD1_V1.wmf

This product contains a light source of energy efficiency class D.

All values marked with an * are rated values. Thorn uses tried and tested components from leading suppliers, however there may be isolated instances of technology-related failures of individual LEDs during the rated product lifetime. International standards set the tolerance in initial flux and connected load at ±10%. Unless stated otherwise, the values apply to an ambient temperature of 25°C.

Thorn Lighting is constantly developing and improving its products. The right is reserved to change specifications without prior notification or public announcement.
© Thorn Lighting