Isaro Pro

92911360 IP 12L105-730 WSC M BS 3550 CL2 M60 ANT

ISO 9223 C5 | IP66 | IK09

Isaro Pro

A state of the art LED road lighting lantern (small) with 12 LEDs driven at 1,05A with Wide Street & Comfort optic. Programmable LED driver. Class II electrical, IP66, IK09. Housing: die-cast aluminium (EN AC-44300), powder coated textured anthracite (close to RAL7043). Spigot: die-cast aluminium (EN AC-44300), powder coated textured anthracite (close to RAL7043). Enclosure: 5mm thick glass. Fixings: stainless steel. Supplied with Ø60mm spigot adaptor which can be fitted for post-top (0°/5°/10°/15°/20° tilt) or side-entry (-15°/-10°/-5°/0°/5°/10°/15° tilt). Equipped with 50% power reduction circuit, effective 3 hours before and 5 hours after a calculated midnight. It can be deactivated at installation with an easily accessible internal switch. Complete with 3000K LED. Surge protection: 10kV single pulse common mode and 8kV multipulse common mode and 6kV multipulse differential mode. If permanent DALI system is connected, 6kV multipulse common and differential mode.

TLG_ISRP_F_PDB_ANT.jpg

Dimensions: 571 x 224 x 114 mm
Luminaire input power: 39.9 W
Luminaire luminous flux: 5139 lm
Luminaire efficacy: 129 lm/W
Weight: 5.48 kg
Scx: 0.054 m²

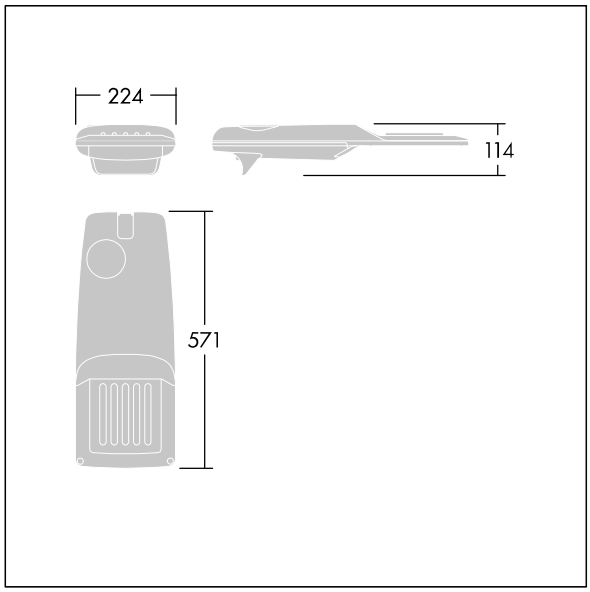

TLG_ISRP_M_LD1.wmf

This product contains a light source of energy efficiency class D.

All values marked with an * are rated values. Thorn uses tried and tested components from leading suppliers, however there may be isolated instances of technology-related failures of individual LEDs during the rated product lifetime. International standards set the tolerance in initial flux and connected load at ±10%. Unless stated otherwise, the values apply to an ambient temperature of 25°C.

Thorn Lighting is constantly developing and improving its products. The right is reserved to change specifications without prior notification or public announcement.
© Thorn Lighting

Isaro Pro

92911360 IP 12L105-730 WSC M BS 3550 CL2 M60 ANT

Thorn Lighting is constantly developing and improving its products. The right is reserved to change specifications without prior notification or public announcement.
© Thorn Lighting