Aerie

96632770 ARS 12L50-740 WSC CL CL2 W5 T60 ANT

ISO 9223 C5 | IP66 | IK10

Aerie

A discreet, post top LED lantern with a timeless design. LED driver for 12 LEDs, driven at 500mA with Wide Street Comfort (asymmetrical) distribution. Class II electrical, IP66, IK10. Canopy and base: corrosion resistant die-cast powder coated aluminium suitable for C5 environments, finished textured anthracite (close to RAL7043). Enclosure: slim UV stabilised polycarbonate with clear finish. Complete with 4000K LED. Post top mounting to Ø60mm column. Pre-wired with 5m cable.

Dimensions: Ø602 x 586 mm
Luminaire input power: 19 W
Luminaire luminous flux: 2829 lm
Luminaire efficacy: 149 lm/W
Weight: 10.99 kg
Scx: 0.172 m²

TLG_AERI_F_S_CL.jpg

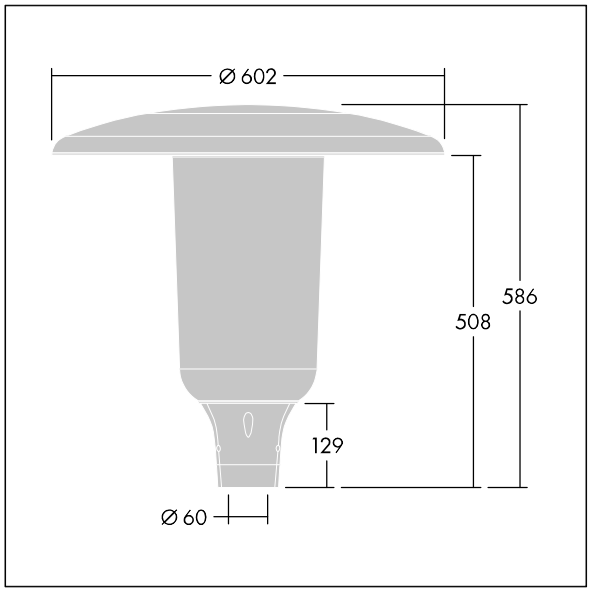

TLG_AERI_M_T60_S.wmf

This product contains a light source of energy efficiency class D.

All values marked with an * are rated values. Thorn uses tried and tested components from leading suppliers, however there may be isolated instances of technology-related failures of individual LEDs during the rated product lifetime. International standards set the tolerance in initial flux and connected load at ±10%. Unless stated otherwise, the values apply to an ambient temperature of 25°C.

Thorn Lighting is constantly developing and improving its products. The right is reserved to change specifications without prior notification or public announcement.
© Thorn Lighting

Aerie

96632770 ARS 12L50-740 WSC CL CL2 W5 T60 ANT

Thorn Lighting is constantly developing and improving its products. The right is reserved to change specifications without prior notification or public announcement.
© Thorn Lighting