# Areaflood Pro

## 92911412 <AFP L 120L35-730 EWR HFX CL2 GY

| | | | | | | | | | | | | |
|---|---|---|---|---|---|---|---|---|---|---|---|---|
| CB Certificate | ISO 9223 C5 | | IP66 | | IK08 | | CE | | | | | Ta -25 +35 |

## Areaflood Pro

A compact, lightweight, general purpose LED area floodlight. With large body. LED converter configured for DALI control over additional wires, driving 120 LEDs at 350mA with Extra Wide Road light distribution. IP66, IK08, Class II electrical. Body: die-cast aluminium (EN AC-44300), Light grey 150 sanded textured (close to RAL9006).. Enclosure: mm thick toughened glass. Reversable mounting stirrup supplied, Complete with 3000K LED.

TLG_AFLP_F_LARGEPDB.jpg

Dimensions: 658 x 490 x 139 mm
Luminaire input power: 124 W
Luminaire luminous flux: 19247 lm
Luminaire efficacy: 155 lm/W
weight: 17.04 kg
Scx: 0.073 m²

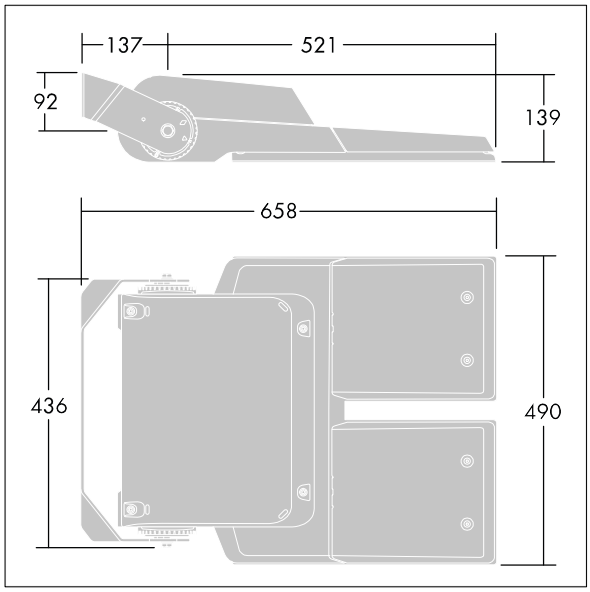


TLG_AFLP_M_LGE.wmf

All values marked with an * are rated values. Thorn uses tried and tested components from leading suppliers, however there may be isolated instances of technology-related failures of individual LEDs during the rated product lifetime. International standards set the tolerance in initial flux and connected load at ±10%. Unless stated otherwise, the values apply to an ambient temperature of 25°C.

Thorn Lighting is constantly developing and improving its products. The right is reserved to change specifications without prior notification or public announcement.
© Thorn Lighting