Voyager Style

96632899 VOYAGER STYLE 150 P MS-WF15 ECD SM-S WH

IP40	IK03	CE	T_a -10 +40

Voyager Style

Ultra slim LED escape sign luminaire for suspended, wall or ceiling mounting; recessed ceiling mounting possible with optional recessed ceiling frame; Luminaire for central emergency light supply, for single luminaire monitoring via DALI (DALI-2 certified), settable emergency light level; Non-maintained and maintained mode settable via the central battery system; housing made of polycarbonate ; luminaire easy to install; Quick fit terminal block, through wiring possible up to 2,5 mm²; supplied with a set of ISO 7010 mountable direction signs (left, right, up, down and blank) for viewing from a maximum distance of 30 m; mounting of signs with discrete mounting pins; zero maintenance thanks to LED technology; service life of 50, 000 h at constant luminous flux; uniform backlighting of pictogram; luminance > 500 cd/m² in the white region; Power supply: 220/240 V AC; Luminaire input power: 3.3 W; degree of protection: IP40, class of protection: Class II electrical; Impact strength: Impact strength: IK03; Dimensions: 265 x 37 x 57 mm; weight: 1.15 kg

TLG_VYST_F_150MSWF.jpg

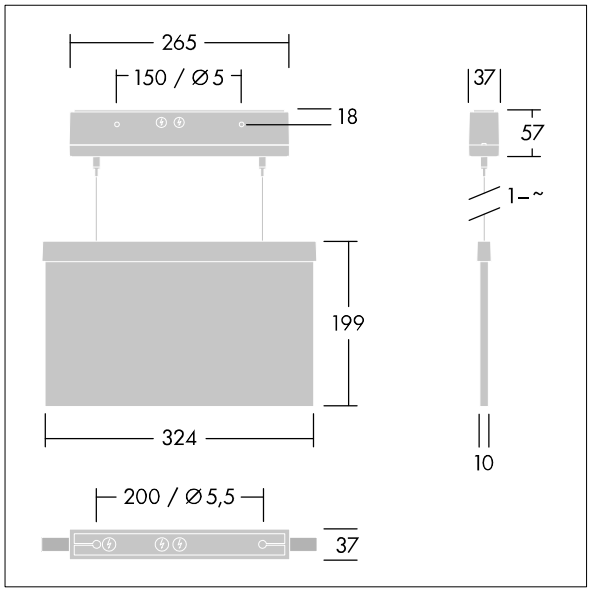

TLG_VYST_M_150MC.wmf

All values marked with an * are rated values. Unless stated otherwise, the values apply to an ambient temperature of 25°C.

Thorn Lighting is constantly developing and improving its products. The right is reserved to change specifications without prior notification or public announcement.
© Thorn Lighting