Contrast

96633450 CONT3 36L105-827 AS HFX 6K ANT

ISO 9223 C5	IP66	IK08		CE				Ta - 20 +35

Contrast

A large architectural Bracket mounted LED floodlight with 36 LEDs driven at 1050mA and a asymmetrical beam distribution. LED driver, DALI-2 dimmable. Class II electrical, IP66, IK08. Body: die-cast, powder coated, textured anthracite (close to RAL7043). Compatible with coastal environments. Glass: tempered, 5mm thick. Gasket: EPDM. Screws: geomet. Equipped with 6kV surge protection device. Complete with 2700K LED

,

Dimensions: Ø397 x 206 mm
Luminaire input power: 117 W
Luminaire luminous flux: 9109 lm
Luminaire efficacy: 78 lm/W
Weight: 13 kg

TLG_CON3_F_M_36L.jpg

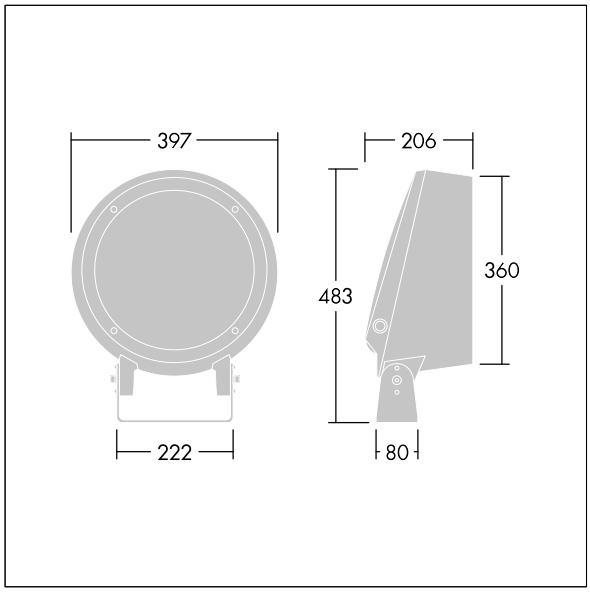

TLG_CONL_M_36-52L.wmf

This product contains a light source of energy efficiency class E.

All values marked with an * are rated values. Thorn uses tried and tested components from leading suppliers, however there may be isolated instances of technology-related failures of individual LEDs during the rated product lifetime. International standards set the tolerance in initial flux and connected load at ±10%. Unless stated otherwise, the values apply to an ambient temperature of 25°C.

Thorn Lighting is constantly developing and improving its products. The right is reserved to change specifications without prior notification or public announcement.
© Thorn Lighting