Primata 2 Trunking

96502622 <PR2 T TW 1475 9x2,5/35/49/80

IP20

Flexible and versatile continuous row lighting system for commercial and industrial applications

Primata II pre-wired trunking with 9 pole integrated wiring. Electrical connection points in modular distance for 35/49/80W luminaires.

Dimensions: 1475 x 60 x 51 mm
Weight: 1.97 kg

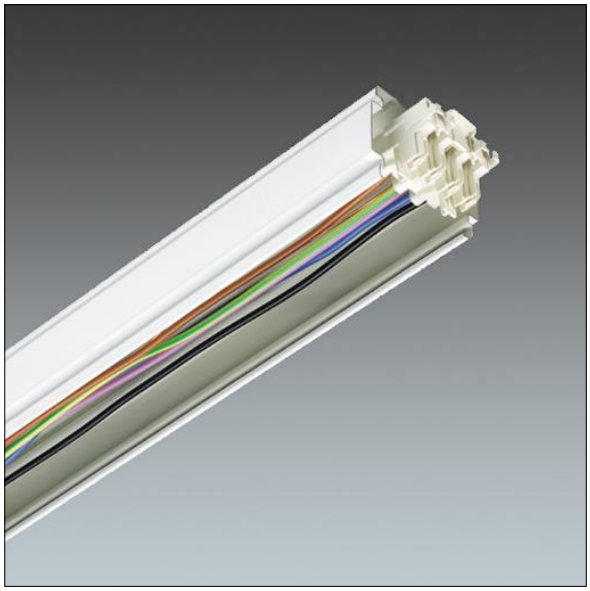

TLG_PMTA_F_TR.jpg

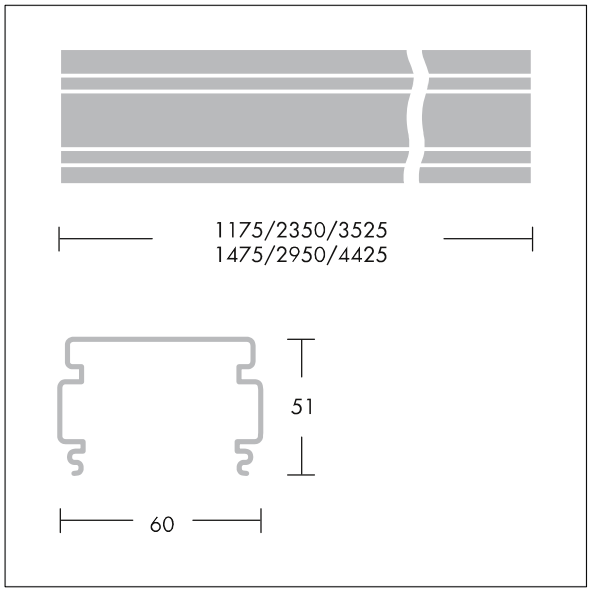

TLG_PMTA_M_TRT16.wmf

All values marked with an * are rated values. Unless stated otherwise, the values apply to an ambient temperature of 25°C.

Thorn Lighting is constantly developing and improving its products. The right is reserved to change specifications without prior notification or public announcement.
© Thorn Lighting