Discontinued

96206484 <EYE VS 1X28W TC-DDEL HF OP L SIL

IP65	IK10							960°C	Ta -15 +35	

Discontinued

Round, vandal resistant bulkhead luminaire for 1x28W Light Source: 1 x TC-DDEL / 28W lamp(s) with electronic - fixed output ballast. Class I electrical, IP65, IK10. Body, large size, in die-cast aluminium (LM6), powder coated silver-grey. Diffuser in opal polycarbonate. With die-cast aluminium visor feature. To be wall or ceiling mounted, electrical connection via 3 x 2 x 2.5mm² terminal block. Lamps to be ordered separately.

Dimensions: Ø340 x 155 mm
Luminaire input power: 29 W
Weight: 2.8 kg

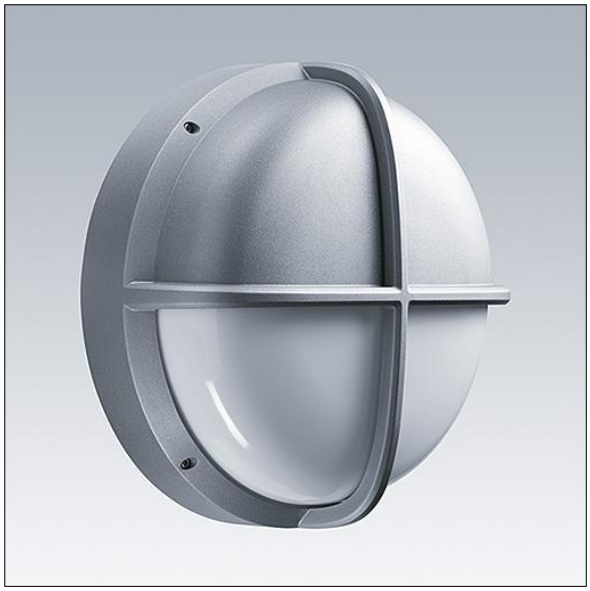

TLG_EYKN_F_LGVSSILOP.jpg

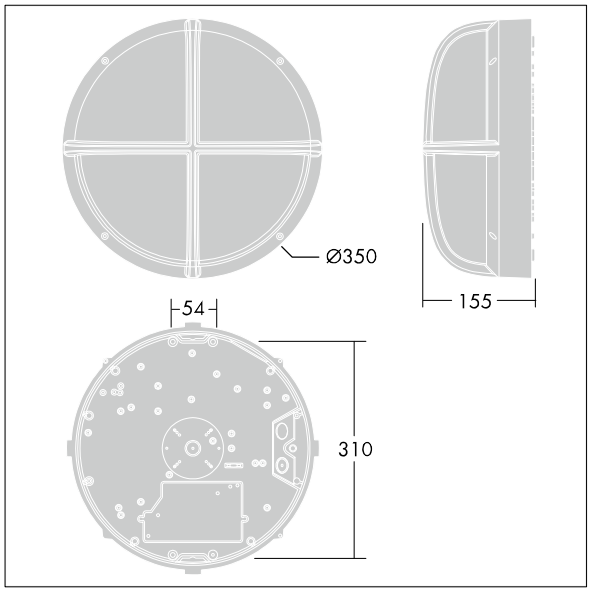

TLG_EYKN_M_LGE.wmf

All values marked with an * are rated values. Unless stated otherwise, the values apply to an ambient temperature of 25°C.

Thorn Lighting is constantly developing and improving its products. The right is reserved to change specifications without prior notification or public announcement.
© Thorn Lighting

Discontinued

96206484 <EYE VS 1X28W TC-DDEL HF OP L SIL

Thorn Lighting is constantly developing and improving its products. The right is reserved to change specifications without prior notification or public announcement.
© Thorn Lighting