96547497 EYE HA 1X18W TC-DEL HF CL S SIL L840

IP65 | IK10 | 850°C | Ta -15 +35

Round, vandal resistant bulkhead luminaire for 1x18W Light Source: 1 x TC-DEL / 18W lamp(s) with electronic - fixed output ballast. Class I electrical, IP65, IK10. Body, small size, in die-cast aluminium (LM6), powder coated silver-grey. Diffuser in clear polycarbonate. With die-cast aluminium halo-visor feature. To be wall or ceiling mounted, electrical connection via 3 x 2 x 2.5mm² terminal block. Complete with 840 lamp(s).

Dimensions: Ø285 x 150 mm
Luminaire input power: 18 W
Weight: 2 kg

TLG_EYKN_F_SMHLOVSSILCL.jpg

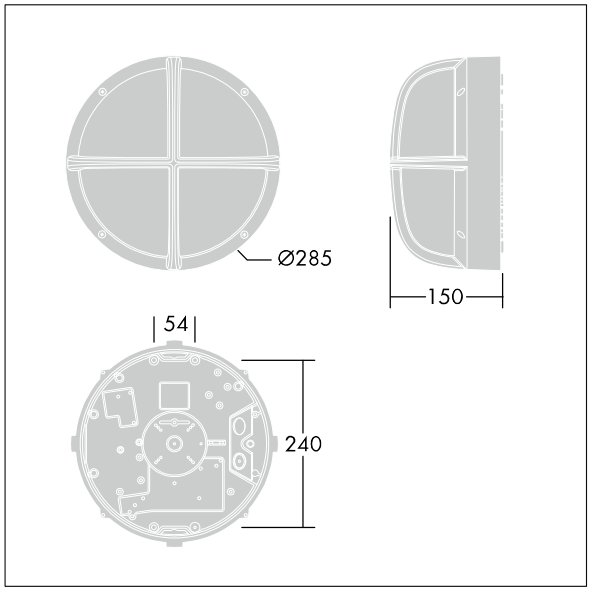

TLG_EYKN_M_SML.wmf

All values marked with an * are rated values. Unless stated otherwise, the values apply to an ambient temperature of 25°C.

Thorn Lighting is constantly developing and improving its products. The right is reserved to change specifications without prior notification or public announcement.
© Thorn Lighting

96547497 EYE HA 1X18W TC-DEL HF CL S SIL L840

Thorn Lighting is constantly developing and improving its products. The right is reserved to change specifications without prior notification or public announcement.
© Thorn Lighting