THORN

96547567 <EYE HA 1X26W TC-TEL HF OP S ANT L840

IP65	IK10		CE		EAC			960°C	Ta -15 +35	

Round, vandal resistant bulkhead luminaire for 1x26W Light Source: 1 x TC-TEL / 26W lamp(s) with electronic - fixed output ballast. Class I electrical, IP65, IK10. Body, small size, in die-cast aluminium (LM6), powder coated anthracite. Diffuser in opal polycarbonate. With die-cast aluminium halo-visor feature. To be wall or ceiling mounted, electrical connection via 3 x 2 x 2.5mm² terminal block. Complete with 840 lamp(s).

Dimensions: Ø285 x 150 mm
Luminaire input power: 27 W
Weight: 2 kg

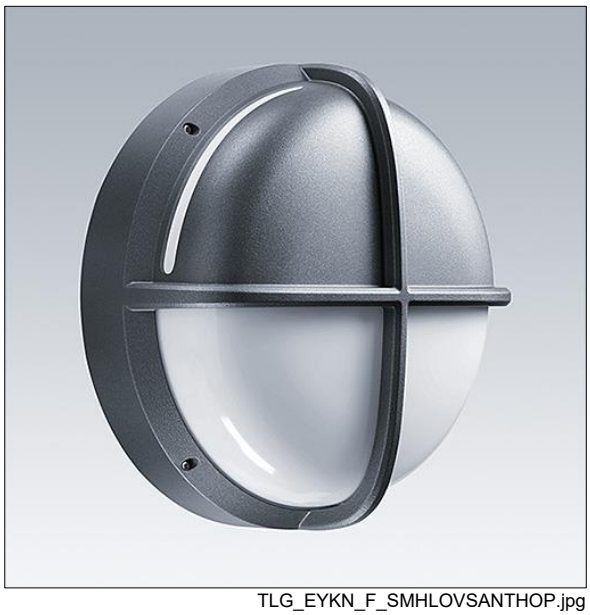

TLG_EYKN_F_SMHLOVSANTHOP.jpg

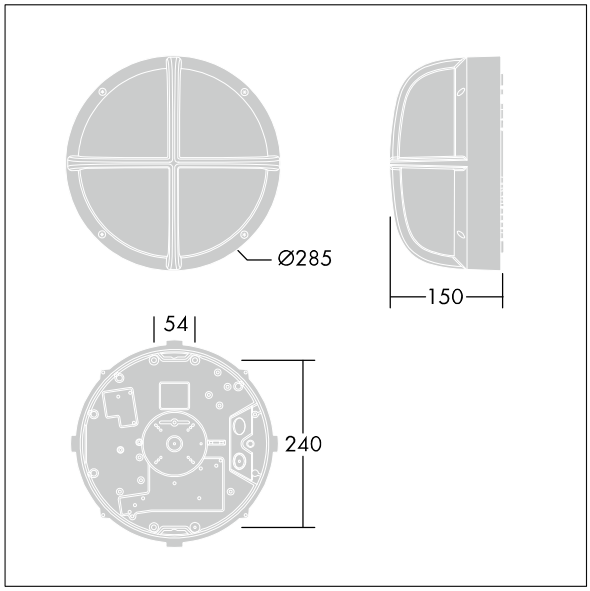

TLG_EYKN_M_SML.wmf

All values marked with an * are rated values. Unless stated otherwise, the values apply to an ambient temperature of 25°C.

Thorn Lighting is constantly developing and improving its products. The right is reserved to change specifications without prior notification or public announcement.
© Thorn Lighting

THORN

96547567 <EYE HA 1X26W TC-TEL HF OP S ANT L840

Thorn Lighting is constantly developing and improving its products. The right is reserved to change specifications without prior notification or public announcement.
© Thorn Lighting