Contrast 2 LED

96261899 <CONT2 S 4X4L70 CBOX GT MONO

THORN

Contrast 2 LED

Connection box and power supply. Material: die-cast aluminium in sanded, silver grey. For use in conjunction with the Small Contrast 2 LED.

Weight: 1.3 kg

TLG_CONL_F_CBMONOS.jpg

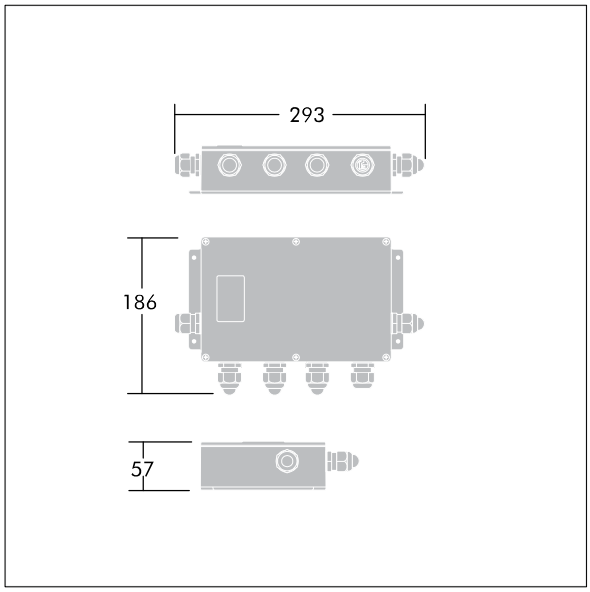

TLG_CON2_M_GEAR2.wmf

All values marked with an * are rated values. Unless stated otherwise, the values apply to an ambient temperature of 25°C.

Thorn Lighting is constantly developing and improving its products. The right is reserved to change specifications without prior notification or public announcement.
© Thorn Lighting