Contrast 2 LED

96263212 <CONT2 L 36L70 R/S RGB 24° DMX

ISO 9223 C3	IP66	IK08		CE		EAC

Contrast 2 LED

A compact architectural LED Bracket mounted with 24° light distribution. Class II electrical, IP66, IK08. Body and Frame: die-cast aluminium, sanded silver grey 150. Glass: tempered 4mm thick. Gasket: EPDM. Complete with RGB LEDs.

With integral power supply and DMX module.

Dimensions: 407 x 295 x 95 mm
Luminaire input power: 84.2 W
Weight: 7.55 kg

TLG_CONL_F_L26X26PDB.jpg

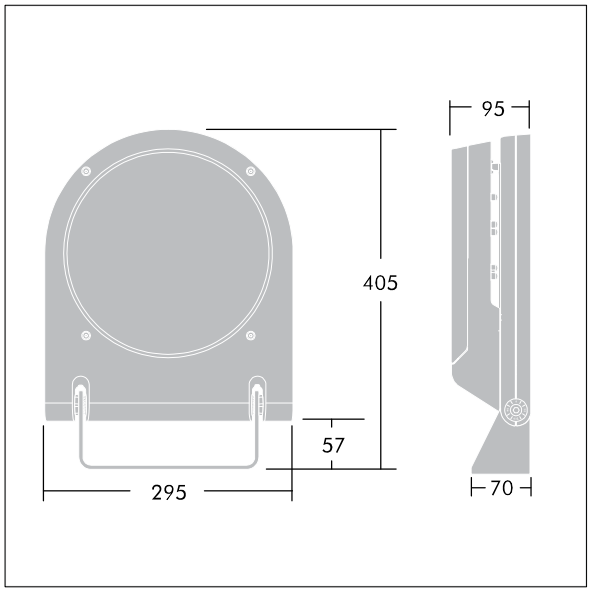

TLG_CON2_M_LDL mod.wmf

All values marked with an * are rated values. Thorn uses tried and tested components from leading suppliers, however there may be isolated instances of technology-related failures of individual LEDs during the rated product lifetime. International standards set the tolerance in initial flux and connected load at ±10%. Unless stated otherwise, the values apply to an ambient temperature of 25°C.

Thorn Lighting is constantly developing and improving its products. The right is reserved to change specifications without prior notification or public announcement.
© Thorn Lighting