96267371 <SATIN2 MRE L950 36L35 A/S RGBW KIT

IP68 | IK10 | Ta25

A discreet floor recessed linear floodlight for façade illumination applications. 36 LEDs driven at 350mA with asymmetrical distribution. Electronic, DMX controllable control gear. Body: extruded aluminium (EN AW-6060 T6) painted textured silver grey. Sides: die-cast aluminium painted textured silver grey. Enclosure: tempered glass 10mm thick. Class II electrical, IP68, IK10. Pre-wired with 1m of 5x1mm² Profiplast CSA cable at one end, for connection to remote gear box. Complete with RGBW LEDs

Dimensions: 954 x 96 x 112 mm
Luminaire input power: 38 W
Weight: 5.9 kg

TLG_STN2_F_PDBMRE.jpg

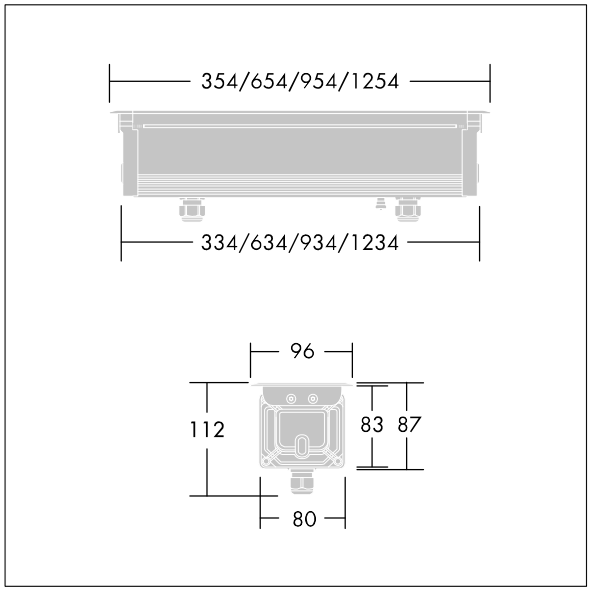

TLG_SATL_M_LD1_03.wmf

All values marked with an * are rated values. Thorn uses tried and tested components from leading suppliers, however there may be isolated instances of technology-related failures of individual LEDs during the rated product lifetime. International standards set the tolerance in initial flux and connected load at ±10%. Unless stated otherwise, the values apply to an ambient temperature of 25°C.

Thorn Lighting is constantly developing and improving its products. The right is reserved to change specifications without prior notification or public announcement.
© Thorn Lighting

THORN

96267371 <SATIN2 MRE L950 36L35 A/S RGBW KIT

Thorn Lighting is constantly developing and improving its products. The right is reserved to change specifications without prior notification or public announcement.
© Thorn Lighting