Beta

96628248 BETA OFFICE LED4000-830 HF E3 Q597

IP 20 40	IK 03	⧈	CE	EAC	650 °C	T_a25

Beta

A recessed LED luminaire with a slim 9mm profile.
Electronic, fixed output control gear. Class II electrical.
Body: aluminium, white (RAL 9016). Compliant to EN12464 office lighting norms, UGR<19, <3000cd/m² @ 65°.
Complete with 3000K LED

Dimensions: 597 x 597 x 9 mm
Luminaire input power: 38.3 W
Luminaire luminous flux: 4131 lm
Luminaire efficacy: 108 lm/W
Weight: 5.4 kg

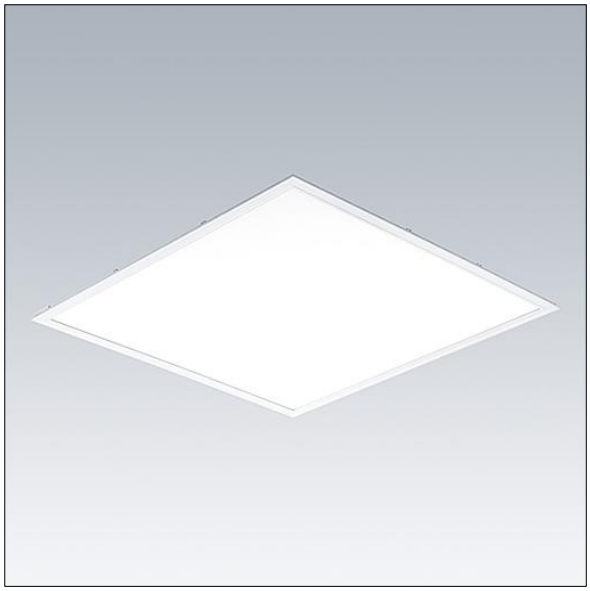

TLG_BETA_F_PDB.jpg

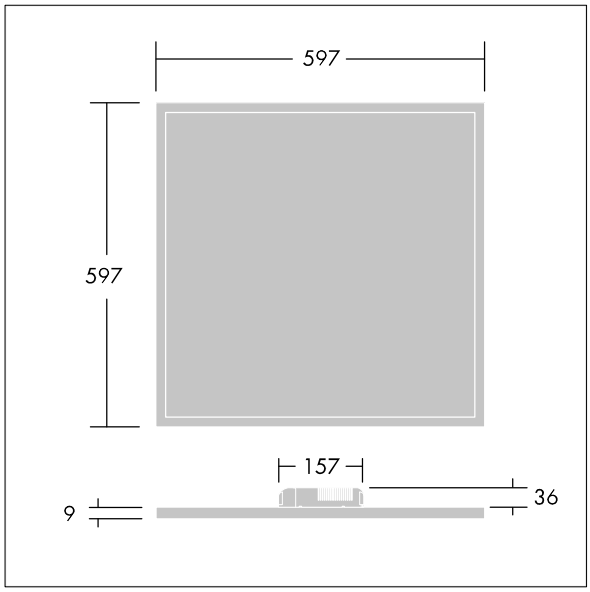

TLG_BETA_M_597.wmf

All values marked with an * are rated values. Thorn uses tried and tested components from leading suppliers, however there may be isolated instances of technology-related failures of individual LEDs during the rated product lifetime. International standards set the tolerance in initial flux and connected load at ±10%. Unless stated otherwise, the values apply to an ambient temperature of 25°C.

Thorn Lighting is constantly developing and improving its products. The right is reserved to change specifications without prior notification or public announcement.
© Thorn Lighting

Beta

96628248 BETA OFFICE LED4000-830 HF E3 Q597

Thorn Lighting is constantly developing and improving its products. The right is reserved to change specifications without prior notification or public announcement.
© Thorn Lighting