# Discontinued

## 92900323 <CHAL 200 LED1300-830 HFIX RSB WL6

| | | | | | | | | | | | | | |
|---|---|---|---|---|---|---|---|---|---|---|---|---|---|
| CB Certificate | | | IP20 IP54 | IK03 | | CE | | EAC | | | 850°C | $T_a$25 | |

## Discontinued

A recessed LED downlight. Remote DALI dimmable control gear. IP54 (IP20 from above), Class II electrical. Body: aluminium, painted white (RAL 9016). Reflector: satinbrite. Suitable for mounting in ceiling thicknesses of 1-40mm in a Ø200mm cut-out. Complete with 3000K LED. 6 pole Wieland connector

Dimensions: Ø220 x 94 mm
Luminaire input power: 14.2 W
Luminaire luminous flux: 1300 lm
Luminaire efficacy: 92 lm/W

TLG_CHLC_F_PDB.jpg

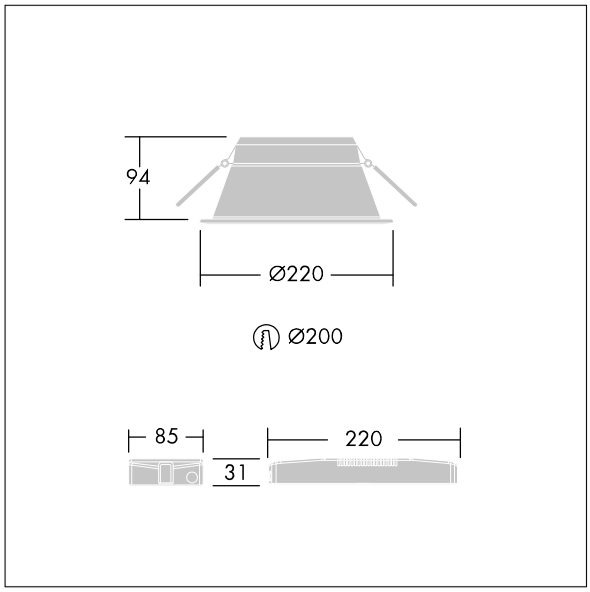


TLG_CHLC_M_DL1.wmf

All values marked with an * are rated values. Thorn uses tried and tested components from leading suppliers, however there may be isolated instances of technology-related failures of individual LEDs during the rated product lifetime. International standards set the tolerance in initial flux and connected load at ±10%. Unless stated otherwise, the values apply to an ambient temperature of 25°C.

Thorn Lighting is constantly developing and improving its products. The right is reserved to change specifications without prior notification or public announcement.
© Thorn Lighting

# Discontinued

## 92900323 <CHAL 200 LED1300-830 HFIX RSB WL6

Thorn Lighting is constantly developing and improving its products. The right is reserved to change specifications without prior notification or public announcement.
© Thorn Lighting